ION TRANSPORT THEORY FOR A STRONGLY ROTATING BEAM INJECTED TOKAMAK PLASMA

A THESIS
Presented to
the Faculty of the Division
of Graduate Studies

By

Gary William Neeley

In Partial Fulfillment
of the Requirements for the Degree
Doctor of Philosophy
in the School of Nuclear Engineering

Georgia Institute of Technology

February, 1987

Thesis

"Ion Transport Theory for a Strongly Rotating, Beam Injected Tokamak Plasma"

Approved: 4/13/87

Dr. Weston M. Stacey, Jr., Chairman

Dr. C.E. Thomas

Dr. Joseph Ford

Dr. G.L. Main

Dr. D.J. Sigmar

ACKNOWLEDGEMENTS

I would like to thank my advisor, Weston M. Stacey, Jr., for suggesting this topic. Thanks are also given to Georgia Power Company for the use of their clerical equipment and assistance. Most of all I would like to thank my wife, Pat, for her patience and her love through these trying years. She bore more than her share of the responsibility for raising our three children and creating a loving family environment which contributed to this thesis in an integral way.

TABLE OF CONTENTS

LIST OF ILLUSTRATIONS

SUMMARY

The kinetic theory of ion transport in axisymmetric tokamak plasmas has been extended to include the effects of strong plasma rotation and radial viscous momentum transfer due to unbalanced neutral beam injection. To accomodate particle flow speeds which are comparable in magnitude to the ion's thermal velocity, the kinetic analysis is carried out in a coordinate frame which is moving with the plasma. As a result, the kinetic transport equations are a simple generalization of the kinetic equations valid for non-rotating plasmas with the radial gradient of the toroidal angular velocity appearing as a driving term like the temperature gradient.

An ordered hierarchy of kinetic equations are obtained for both the gyroangle dependent and gyrotropic components of the particle distribution function by expanding the particle distribution function, electric field vector and particle flow in powers of the gyroradius parameter. The lowest order kinetic equation governing the gyroangle dependent component of the particle distribution function is solved and the result is used in conjunction with the definition of the toroidal viscosity to obtain the functional structure of the gyroviscous momentum drag force.

The collisional response of the plasma to intense momentum injection is obtained by use of a linearized

Fokker-Planck collision operator which accounts for both the direct and indirect effects of beam particle collisions with the background plasma species. This operator is used in the $O(\delta^1)$ drift kinetic equation to obtain a solution for the gyroaveraged component of the particle distribution function in all collision frequency regimes. The lowest order neoclassical friction-flow and parallel stress constitutive relationships are computed from a knowledge of the $O(\delta^1)$ particle distribution function.

Finally, the fluid equations are used in conjunction with the kinetically derived constitutive relationships to obtain an expression for the radial particle flux for a mixed regime beam injected plasma. In this regard, the theory of particle transport in the presence of an external beam momentum source is evaluated for a two specie plasma composed of a high Z impurity ion and a dominant hydrogenic ion species.

CHAPTER I

INTRODUCTION

1.1 REVIEW OF PREVIOUS WORK

The principal challenge of controlled nuclear fusion research is to attain thermonuclear temperatures of 10^8 to 10^9 K and confine the plasma sufficiently long so that the thermonuclear energy produced significantly exceeds the energy input. Unfortunately at such extreme temperatures, the plasma ions which escape the plasma and associated charge-exchange neutrals tend to erode the tokamak's first wall thereby resulting in impurity ion production [1]. It is well known [2-6] that in a closed system without external sources or sinks of particles and momentum, the classical [2,7] and neoclassical [3,4,2-8] transport theory predicts that the net impurity flow will be inward. In essence, the uncontrolled inward flux of cold impurity ions can lead to excessive radiation cooling resulting in a signficant reduction of the fusion power output or premature termination to the plasma discharge altogether [9-12] as well as a reduction in the plasma pressure, alteration of the radial current distribution and charge accumulation that may lead to a disruption. However if the influx of impurities can be reversed or the position and concentration of the impurities can be controlled, then the impurities can be used to shape

the plasma temperature profiles thereby allowing the plasma burn dynamics and wall erosion rate to be controlled.

The use of an external source of momentum as a means of impurity control has been studied extensively and a vast number of experiments have been performed in order to confirm the feasibility of this method of impurity control. In particular, it has been predicted theoretically [13-18] and confirmed experimentally [19-21] that coinjected neutral beam momentum (momentum injection directed along the magnetic field lines) will inhibit and in some cases reverse the inward flow of impurities in a tokamak plasma. The use of neutral beam injection as a method of impurity control as well as a source of auxillary heating warrants a more thorough understanding of the fundamental mechanisms which govern the transport process during the external momentum injection sequence. Of particular interest for present generation tokamaks is the effect of strong rotation and radial momentum transfer on particle, momentum and heat transport. In this thesis, the existing kinetic theory for particle, momentum and heat transport is extended to account for the effects of unbalanced neutral beam injection such as strong plasma rotation, radial momentum transfer, and other effects which become important in a beam injected plasma.

The transport theory for a toroidally confined axisymmetric plasma represents a fundamental departure from clas-

sical transport theory in that the magnetic field of a toroidal confinement system is necessarily nonuniform. In tokamaks, the crucial effects of magnetic field inhomogeneities are the field curvature and gradient-B- drifts, and the magnetic trapping effects due to spatial variation of the magnetic field strength along the field lines. These effects, in conjunction with the random scattering due to coulomb collisions, result in neoclassical transport across the magnetic surfaces, the magnitude of which is significantly enhanced in comparison to the corresponding classical values. The theoretical consequences of the neoclassical effects in a tokamak plasma can conveniently be discussed in terms of the single collisionality parameter which is defined such that [22]

$$\gamma_a^* = \eta_a B/(\omega_{ta}^B \delta B) \tag{1.1-1}$$

where η_a is the collision frequency, $\delta B = B_{max} - B_{min}$ is the magnetic field modulations on a magnetic surface with B_{max} (B_{min}) being the maximum (minimum) value of the magnetic field on the surface and

$$\omega_{ta}^B = |\S ds/|V_{\parallel}|| = \sqrt{\delta} v_{ta}^2/(2B\ell_B^2) \tag{1.1-2}$$

is the bounce frequency of a deeply trapped thermal particle (Here $\ell_B = \pi qR$ is the magnetic field connection length with q being the safety factor). If the time between collisions is less than the time required for a particle to complete an untrapped orbit, then the form of the orbit can not be relevant to the diffusion process and the plasma is in the fluid-like Pfirsch-Schluter or collisional regime [23,24,25-27]. In the context of the collision parameter γ_a^*, this regime is characterized by the inequality $(\delta B/B)^{-3/2}$ $\ell_B/\rho_a >> \gamma_a^* >> (\delta B/B)^{-3/2}$ where the lower bound on γ_a^* signifies that the mean free path along the magnetic field line is short enough so that the particles are spatially localized and the upper bound ensures that the particles are strongly magnetized [7,8,28,29].

At the other extreme, the long mean free path or banana regime is characterized by particles which become trapped in magnetic wells due to the spatial variation of the magnetic field strength along the field lines. In essence the banana regime is governed by the inequality $\gamma_a^* << 1$ implying that this regime is applicable to that range of collision frequencies for which the effective collisional scattering rate of trapped particles is less than the trapped particle bounce frequency so that the particles execute collisionless orbits [30-35]. Physically, the trapped particles excute "banana" shaped orbits because the magnetic gradient and curvature drifts are in different directions for each leg of

the orbit. In this regime the particle's bounce motion in the parallel magnetic well is slowly interrupted by pitch angle scattering into circulating particle space resulting in particle diffusion.

The remaining neoclassical regime, namely the plateau or transition regime, exists for values of γ_a^* for which $\gamma_a^* < (\delta B/B)^{-3/2}$. In this regime the particle transit time around the magnetic axis is equal to or greater than their effective collision time. As a result, trapped particles no longer persist and resonant particles dominate the diffusion process when the magnetic field modulations are small. These resonant particles do not have their toroidal drifts compensated for by the rotational transform resulting in a net radial excursion from the magnetic flux surface [7,8,36-39].

In the absence of unbalanced neutral beam injection there are two major contributions to the neoclassical flux which remain distinguishable throughout all the collision frequency ranges [25,40,41]. One such contribution, which is applicable primarily to the Pfirsch-Schluter regime, arises from variations in the adiabatic variables (pressure, temperature, etc.) and the electrostatic potential within a magnetic surface. In essence the pressure stress anistropy is kept small by collisional randomization but the mean free path is short enough to allow pressure, temperature and electrostatic potential variations along the magnetic field

lines. Therefore the finite collisional resistivity along the field lines causes poloidal gradients in the thermodynamic variables and electrostatic potential which in turn drive the Pfirsch-Schluter fluxes. Furthermore since these fluxes are independent of the poloidal plasma rotation, then they can be determined uniquely from flow incompressibility and from the perpendicular component of the momentum balance. As a result, the Pfirsch-Schluter fluxes can be obtained directly from the fluid equations in which the viscous stress forces are neglected.

The second contribution to the neoclassical fluxes in a plasma devoid of external influences arises from stress anistropies and is the dominant effect in the long mean free path regime. In an axisymmetric plasma the viscous forces are directly proportional to the magnitude of the poloidal rotation [8,41]. As a result, the banana-plateau fluxes are driven by the poloidal component of the hydrodynamic flows and therefore are a consequence of the magnetic field nonuniformities and insufficient collisions to isotropize the pressure tensor.

The effects of magnetic field inhomogeneities on classical transport processes in the absence of unbalanced neutral beam injection and associated strong plasma rotation and radial viscous transfer have been treated extensively in the literature and are well summarized for a pure plasma in a review paper by F. L. Hinton and R. D. Hazeltine [7].

Similarly, a unified treatment of impurity transport in which the macroscopic fluid aspects of neoclassical transport theory are stressed can be found in a review paper by S.P.Hirshman and D.J. Sigmar [8].

As stated earlier, one of the most promising methods of impurity control (and explusion) is by the use of an externally imposed source of momentum such as neutral beam injection. The principal of impurity control with neutral beam injection can easily be understood by noting that since the particle and heat fluxes depend primarily on the interplay between the coulomb force and the magnetic field inhomogeneities, which are inherent in a toroidal configuration, then any external agent of sufficient strength to perturb the particle drift motions is capable of affecting the transport process. When external momentum is injected into a tokamak plasma, a myriad of new effects arise which alter the conventional transport process. In particular the total effect of momentum injection on the radial particle and heat fluxes can be attributed to at least four mechanisms. First, there is a direct collisional interaction of the beam source with the background plasma which drives cross field fluxes in a manner analogous to that of collisional momentum and heat exchange among different species [13,17]. Secondly, momentum injection produces a toroidal plasma rotation. Once steady state rotation is achieved the external source of momentum is

balanced by a drag force. In essence, the external momentum source and the associated drag force alter the lowest order particle flows within the flux surface, thereby indirectly modifying the particle and heat transport fluxes [17,18]. Furthermore, the external momentum and drag source also contribute to the radial electrostatic potential gradient which leads to a potential gradient driven transport flux [17,18]. Finally, experimental evidence has indicated that the toroidal rotation speeds in momentum injected devices can be comparable with the thermal ion speed for certain heavy ion species [42,43]. As a result, the ensuing centrifugal inertial effects lead to density and electrostatic potential variations along the magnetic field lines [8,44,45]. This in turn modifies the lowest order flow patterns and therefore the cross field particle and heat transport fluxes [8,45,46,47].

The experimental response of present generation tokamaks to unbalanced neutral beam injection indicates that central rotational velocities of approximately 10^5 m/sec have been obtained [42,43]. During the initial phase of the beam injection sequence, the plasma is accelerated on a time scale of ten to thirty milliseconds, a value slightly larger than the rise time of the beam power. Physically, the initial buildup of toroidal rotation sequence is determined by a $\vec{J} \times \vec{B}$ force which arises as a consequence of prompt momentum transfer [48]. In essence the creation of fast

ions by the ionization of injected neutrals leads to a radial current and therefore produces a buildup of charge. Since a plasma is a polarizable media, a polarization current, which results from the changing radial electric field, cancels the fast ion creation current, and the ensuing force due to the polarization current transfers part of the injected momentum to the plasma. Since the prompt transfer of injected momentum is proportional to the rate of fast ion creation, then this transfer mechanism occurs immediately after the momentum injection source is turned on whereas the direct collisional interaction between the beam particles and background plasma occurs on a slowing down time scale. When steady state is achieved, the time variation of the radial electric field vanishes, and therefore the polarization current goes to zero. As a result, the fast ion creation current must now be balanced by other currents. It is then these forces, which result from the plasma currents necessary to balance the ion creation current, which cancel the momentum losses in the steady state.

Although the prompt transfer mechanism provides a simple physical explanation for the transfer process of injected momentum to the bulk plasma, it does not address any momentum drag mechanism which also could be occuring during the initial injection sequence. In addition, the drag forces, which balance any net momentum input during steady state rotation must be accounted for. Now there is clear

experimental evidence that momentum drag losses are experienced during momentum injection and that the drag force appears to be due to a radial transport of momentum [49,50]. In particular, experimental measurements in PLT [42,49] have revealed that the velocity profile is parabolic rather than centrally peaked which is the deposition profile of the injected momentum thereby implying that the injected momentum was being lost from the center of the plasma. Furthermore, using the experimental data from PLT in a diffusion model yields a momentum transport rate which is roughly the same order of magnitude as the particle and heat diffusion rate [49]. Similarly for mid-range values of the controllable plasma parameters, quasi-steady state global values of the momentum diffusion rates in ISX-B [43,50] indicate that they are comparable to the energy and particle diffusion rates.

As a general rule, the most commonly used parameter to quantify the effects of momentum drag is the total momentum confinement time which is defined as

$$\tau_a^{conf} = \sum_j \int_0^r (n_j m_j \vec{v}_j \cdot \hat{n}_\phi)\, dr / (\vec{S} \cdot \hat{n}_\phi) \tag{1.1-3}$$

where $\vec{S} \cdot \hat{n}_\phi$ is the toroidal momentum deposition from the beams and r is some radius. The momentum confinement time

can be determined experimentally from either a force balance at steady state rotation or from the rotation decay time after the momentum injection is terminated. Using the first technique, confinement times of 10-30ms and 10-20ms have been inferred in PLT [42,49] and ISX-B [43,50], respectively. Furthermore, rotation decay measurements of titanium impurity ions in PDX [51] have led to inferred momentum confinement times of 80-100ms for a beam power range of 3.5 to 7.2 MW.

To gain some physical insight into the fundamental processes which are responsible for this drag phenomena, the drag mechanisms can be categorized into two classes, namely the true external drags and the momentum diffusion drags. The true plasma drags consist primarily of localized collisional interactions with the plasma wall and limiter, and charge exchange effects with the background neutral gas [52,53]. Of these true drag mechanism only charge exchange effects are significant enough to remove the diffused momentum from the plasma. In this regard, it has been shown experimentally [42,49] that with neutral densities on the order of $10^{10}/m^3$, charge exchange is sufficient to maintain a near zero plasma rotation at the limiter.

The momentum diffusion drag mechanisms are responsible for the radial transfer of momentum from the plasma interior to the plasma edge. Included in this class of drag mechanism are the convective processes such as ripple induced

[52], drift wave [54,55,56] and turbulent convective transport mechanism [57], and conduction drag mehanisms due to viscous momentum transfer [34,52,58,59,60,61,62,63]. It has been shown that with the large toroidal rotational speeds developed during momentum injection and all coils operational, the ripple induced convective effects are too small to account for the momentum confinement times inferred from experiments on PLT and ISX-B [64]. A similar result has been obtained for the other convective drag mechanisms. In essence, convection only reduces momentum at the center of the plasma by reducing the number of particles but does not change the momentum per particle. Consequently the convection transport mechanisms cannot adequately explain the magnitude of the momentum drag experienced in the interior of the plasma during neutral beam injection.

In reference to the conduction mechanisms, early theoretical calculations [34,52,58] of the perpendicular ion viscosity, which were based on the assumption that the parallel ion flow was much less than its thermal velocity, have yielded a radial transport rate two orders of magnitude smaller than was actually observed. Refinement of the neo-classical perpendicular viscosity calculation to the high flow regime [59,60,63] still resulted in radial transport rates of one to two orders of magnitude smaller than those inferred from experiment. In this regard Hinton and Wong [60] and Catto [63] have recently generalized the conven-

tional neoclassical perpendicular viscosity calculation to account for the effects of strong plasma rotation. In the former case, a calculation of the cross field diffusion of momentum was made for a strongly rotating plasma in which the large $\vec{E} \times \vec{B}$ drift formulation was assumed. The results of this investigation indicated that the lowest order perpendicular viscosity scales with collision frequency, and therefore the calculated momentum transport rates were one to two orders of magnitude too small to explain the magnitude of the observed confinement times. In reference [63], a gyrokinetic evaluation of the toroidal viscosity was made for a strongly rotating plasma for a small $\vec{E} \times \vec{B}$ drift case by retaining finite poloidal gyroradius effects. Unfortunately, the results of this analysis yielded momentum transport rates which were in qualitative agreement with reference [60] in that the lowest order toroidal viscosity scales with collision frequency and therefore is unable to explain the experimentally observed momentum confinement times. In a different vein, Hogan [62] has shown that the viscosity itelf drives an poloidally asymmetric $O(\delta^1)$ flow. This in turn leads to a perpendicular viscosity which is functionally identical to that of Braginski but where the perpendicular viscosity coefficient is given by the expression $\eta_{da}^{\perp eff} = (1 + 2.31q^2)\eta_{da}^{\perp}$, where $2.31q^2$ is the well known Pfirsch-Schluter factor. Since this coefficient is a function of η_a , then it scales with

collision frequency and again is too small to account for the radial momentum transport rates which have been deduced from experimental measurements.

On a positive note however, evaluation of the gyroviscous component of the classical viscosity tensor, corrected for toroidal geometry and rotational effects, has yielded the right order of magnitude for the experimentally observed confinement times [61]. In essence it was shown that for a rapidly rotating plasma where the density and electrostatic potential can exhibit relatively strong poloidal variations over a flux surface that the angular frequency of rotation of the flux surface can vary poloidally. The toroidal geometry misaligns the surfaces of constant angular frequency with respect to the flux surfaces thereby resulting in a departure from rigid-body rotation. It is then this deviation from pure rotation within a flux surface which drives the gyroviscous force. This result was first obtained by Stacey and Sigmar [61] using the classical Braginski expression for the viscosity stress tensor [65]. Upon associating the viscous toroidal force with the momentum drag term used in the fluid formulism and making a large aspect ratio approximation, then it was shown that the gyroviscous force is approximately a hundred times larger than the perpendicular viscosity force [61]. This is indeed the order of magitude of the drag force needed to explain the experimental observations indicating that the gyro-

viscous drag mechanism is the dominant mode of radial momentum transfer from the interior of a strongly rotating beam injected plasma. In particular, Stacey et. al. [66] have calulated momentum confinement times for PLT, ISX-B, and PDX using the gyroviscous drag force and have achieved excellent agreement with the experimentally measured values.

One major difference between the expression for the gyroviscosity expression given in reference [61] and the perpendicular viscosity drag relationships obtained by other authors deals with the poloidal dependence of the lowest order collisionless flows. In both reference [60] and [63] the lowest order flows were soley a function of the radial coordinate, with poloidal variations in the angular frequency arising only in the $O(\delta^2)$ approximation. As a result $\langle R^2\hat{e}_\phi\cdot\vec{\nabla}\cdot\overleftrightarrow{\Pi}_a\rangle$ vanishes to the lowest order approximation implying that the lowest order nonvanishing radial viscosity scales with collision frequency. However in reference [61], the lowest order flows possess $O(\varepsilon^1)$ poloidal variations, and consequently $\langle R^2\hat{e}_\phi\cdot\vec{\nabla}\cdot\overleftrightarrow{\Pi}_a\rangle \neq 0$ to the lowest approximation. Since the lowest order gyroviscous component of the viscosity tensor is obtained from the gyroangle dependent component of the particle distribution function in the limit $\eta_a/\Omega_a << 1$,then this component will be the same for all collision frequency regimes.

The original development of transport theory in the presence of strong plasma rotation, radial momentum transfer

and other beam induced effects was carried out in a fluid framework. In this regard, Burrell, Ohkawa and Wong [44] have developed a fluid formulism for calculating the effect of strong rotation on the radial particle flux in the collisional regime with the assumption that the torodial velocity and radial electric field were given. Assuming that the toroidal mass flow was on the same order as the thermal ion velocity, these authors focused on the transport effects associated with the convective inertial term and the resulting poloidal variation in the density and electrostatic potential. However they omitted the direct effect of the external momentum input and its radial transfer in their analysis. As a result, they obtained a poloidal rotation velocity which was independent of the magnitude and direction of the net external momentum input. Furthermore their expression for the cross field particle flux contained spurious resonances when, $m_a V_{\parallel}^2 = T_a$ where $V_{\parallel}$ is a common flow velocity driven by radial gradients in the density and temperature for protons and impurities. Finally, their theory neglected a self-consistent treatment of the ambipolar potential and the flows in the surface.

The fluid description of transport theory was further extended by Stacey and Sigmar [47,67] to include the effects of strong radial viscous transfer, radial electric field, strong plasma rotation, direct momentum input and other effects which become important in a beam injected

plasma. In essence, this fluid theory embodies a self-consistent formulism from which all vectorial plasma flow components, the amipolar potential, and the inertial driven poloidal variations in the particle density and electrostatic potential can be obtained. Their theoretical development demonstrated that in both the collisional and plateau regimes the cross field fluxes were driven by contributions from the net momentum input, (i.e. beam collisional input and the associated viscous drag force), pressure gradient, inertial effects, radial electric field and nonintrinsically ambipolar terms proportional to the nonlinear poloidal variations in the particle's density and electrostatic potential. In addition, the radial particle flux in the plateau regime was also shown to be driven by pressure anisotropies modified to account for the radial transfer of momentum and for poloidal density variations over the flux surface.

To obtain a complete macroscopic description of transport theory, kinetic theory is needed to provide constitutive relationships for the collisional friction and viscous stress forces in terms of the hydrodynamic flows. Development of constitutive relationships, which incorporate the effects of external momentum injection, strong rotation and radial viscous transfer, necessitates reconstructing the conventional kinetic theory. In this spirit, the pioneering work of Hazeltine and Ware [45] demonstrated that if a

substantial variation of the electrostatic potential within a magnetic surface is included in the conventional kinetic analysis then the ensuing electrostatic trapping effects result in enhanced radial drifts for the hydrogen ion and electrons. Even though the driving mechanism in their analysis for the electrostatic potential variation was the presence of high Z impurity species, the ordering adopted for this investigation is the same as that which would be obtained for a strongly rotating plasma where the plasma mass flow is of the same order as the ion thermal velocity. Their results showed the appearance of a new particle flux, namely an electrostatic flux, which was driven by nonlinear terms proportional to the poloidally varying component of the electrostatic potential. Furthermore, the magnitude of the transport coefficients were shown to be substantially increased and dependent upon the gradients of the equilibrium densities and temperatures rather than upon the densities and temperatures themselves.

Chang and Hazeltine [68,69] have extended the conventional kinetic theory in the collisional regime to account for an poloidally varying component of the electrostatic potential. In a series of papers by these authors, the attention was focused primarily on the physically interesting case in which the electrostatic potential variations become as large as the magnetic field variation on a flux surface such as that resulting from

the convective inertial term. It was found that a new cross field flux, which resulted from a combination of the electrostatic potential variations and magnetic field variations over a flux surface, was formally as large as the usual Pfirsch Schluter flux and nonlinear in the density, temperature, and density gradients. However, their formulism does not provide a self-consistent method by which the radial electric field can be ascertained. Consequently no attempt was made to solve the nonlinear system of equations for the poloidal electrostatic potential variations. Furthermore, they neglected the direct effects of an external source of momentum and momentum drag effects. Therefore this treatment is incomplete and lacks self- consistency.

Chang [70] has extended the conventional transport theory in the banana regime to include inertial effects due to strong rotation by admitting a poloidally varying component of the density and electrostatic potential in the kinetic analysis. In essence it was shown that a poloidally varying electrostatic potential in the long mean free path regime results in an enhanced electrostatic trapping effect which is similar in nature magnetic trapping. The net result of this investigation was in agreement with other authors in that a new term appeared which was driven by nonlinear terms proportional to the poloidally varying component of the electrostatic potential and density. As a

result, the total banana regime flux was shown to be enhanced by a factor of 2 or more over the conventional value. Again however this theory omits the direct effect of the momentum source and the viscous drag terms and lacks self-consistency in that the magnitude of $e_a\tilde{\Phi}/T_a$ was assumed given.

With respect to the plateau regime, Wong and Burell [59] have extended the conventional neoclassical kinetic theory in this regime to include the effect of strong rotation. To allow for parallel flows which are comparable to the ion thermal velocity, these investigators retained the mirror force in the expansion of the drift kinetic equation so that the zeroth order distribution function contains an arbitrary parallel flow. In order that such a distribution can remain steady in the presence of magnetic pumping in the inhomogenous field of the tokamak, they also required that the radial electric field be ordered such that $(\partial\Phi/\partial\chi)/B_\chi \sim v_{ta}$. In general these investigators concluded that the cross field fluxes obtained from this theory are non-linear functions of the density, temperature and parallel flow. Furthermore they concluded that with this ordering the cross field fluxes are second order in toroidicity or first order in δ with the most notable result being that the angular momentum flux is now obtained from the first order rather than the second order distribution function. Finally, they found that ambipolar-

ity of the leading order particle flux is no longer an intrinsic property guaranteed by the conservation of momentum but rather had to be imposed as a condition for determining the radial electric field. Unfortunately, no allowance was made for the direct effects of the momentum source itself or the associated drag effects. Consequently the angular momentum flux obtained by these investigators was much too small to explain the experimentally observed momentum diffusion rates.

Stacey and Sigmar [67] have extended the constitutive relationship for the parallel viscous force in the plateau regime to account for the effects of a strongly rotating plasma. To incorporate the effects resulting from intense plasma rotation, these authors used a "shifted Maxwellian" in the drift kinetic equation. Furthermore, the parallel component of the particle's velocity used in this equation was replaced with the shifted variable $v_{\parallel}' = v_{\parallel} - u$, where $u = -(I/B)\partial\Phi(\chi,\psi)/\partial\psi$ is a parallel flow due to the radial electric field. The analysis was then carried out in a manner analogous to that of the conventional theory but with the shifted variables. The net result of their analysis was a constitutive relationship similar in form to that given by Shaing and Callen [71] but with a viscosity coefficient containing a strong rotation correction factor, an effect which is a manifestation of the shifted structure of the lowest order distribution function.

Hinton and Wong [60] have generalized the neoclassical theory of ion transport in the Pfirsch-Schluter and banana regimes to include centrifugal inertial effects due to strong rotation by allowing the flow speed to be of the order of the ion thermal speed. In essence, this theory was developed by carrying out the usual small gyroradius expansion of the Vlasov Fokker-Planck equation in a reference frame which is moving relative to the lab frame. As a result the kinetic equation was a simple generalization of the drift kinetic equation for nonrotating plasmas with the radial gradient of the toroidal angular velocity appearing as a driving term like the temperature gradient. In effect the parallel motion of the guiding centers and the interparticle collisional effects balance the radial motion of the guiding center which arises from the centrifugal and coriolis forces as well as the gradients and curvature of the magnetic field lines. In the quasi-equilibrium established by collisional thermalization and the decay of the poloidal flow, the ion density is non-uniform on a magnetic surface having a variation with poloidal angle given by the Boltzmann factor. Since the total system potential energy consists of a centrifugal potential as well as the electrostatic potential, then the zeroth order electrostatic potential, which is required for charge neutrality, inherits a poloidal variation. The equilibrium distribution function in the moving frame was

shown to be purely Maxwellian, with the ion temperature being uniform on a magnetic surface, the zeroth order plasma flow being purely toroidal and each flux surface rotating rigidly. Their findings showed that the parallel flows and anisotropy contained in the first order neoclassical distribution function determine, through moments of the collision operators, that the radial fluxes are second order in δ . Unfortunately their results indicated that no significant enhancement of viscosity resulted from strong rotation. However in the analysis carried out by these investigators the direct effects of an external momentum source term and associated radial viscous drag were neglected and they only treated a transport case applicable to a pure plasma.

Recently Catto [63] has generalized neoclassical transport theory in the plateau regime to account for the effects of strong plasma rotation. However unlike the work of previous authors, the perpendicular $\vec{E} \times \vec{B}$ drift in this analysis is considered small in comparison to the ion thermal speed. As a result, the toroidal angular frequency of rotation and radial electric field must now be evaluated by imposing ambipolar diffusion and toroidal angular momentum conservation constraints. A gyrokinetic derivation of the neoclassical transport equation was carried out in the lab frame for a toroidally rotating plasma in which finite poloidal gyroradius effects were retained. In essence

the particle distribution function was expanded in powers of the gyroradius parameter where it was shown that the lowest order solution is a drifting Maxwellian with the lowest order toroidal flow describing the rigid body rotation of each flux surface about the symmetry axis. Furthermore, the lowest order solution was a function soley of the radial coordinate and the constants of the motion. The $O(\delta^1)$ drift kinetic equation was similar in nature to that obtained by Hinton and Wong with the notable exception that this analysis was carried out in the lab frame with the velocity space independent coordinates being the total system Hamilitonian and canonical angular momentum. The radial particle and heat fluxes were evaluated for a pure plasma in the plateau regime where again it was shown that significant enhancements of the cross field fluxes resulted. Unfortunately, the lowest order toroidal viscosity, which controls the radial diffusion of toroidal angular momentum, was shown to scale linearly with the collision frequency and in many respects was very similar to that obtained by previous authors. Like other kinetic analysis, this investigation ignored the lowest order direct collisional and associated drag effects of the momentum source term.

In chapter II of this thesis the fundamental structure and properties of the kinetic and fluid transport equations characterizing a strongly rotating momentum injected plasma are formulated. In this regard, a hierarchy of kinetic

equations are obtained by expanding the distribution function, electrostatic potential and particle flow in powers of gyroradius parameter. Since this thesis deals with flow speeds comparable to the ion thermal speed, the transport equations will be developed in a coordinate frame moving with the plasma. The contribution of the differential test particle and field particle (including beam particles) integral collision operators are approximated by using Laguerre polynomials as trial functions and invoking the conservation properties of the Fokker-Planck operator to effectively renormalize the Laguerre expansion. As a result the integro-differential nature of the collision operator and external momentum source term is removed.

Finally, the fluid basis of transport theory is established. In particular, the multispecies moment equations are developed from a generalized tensor transfer equation which is referenced to a coordinate frame which is moving relative to the lab frame. Furthermore, the functional structure of the radial particle and heat fluxes, and the hydrodynamic and beam flows in the presence of intense plasma rotation are elucidated. Specifically, the mathematical basis and structure of the gyroviscous drag force is established and the various components which drive the cross field particle and heat fluxes are identified.

In chapter III the $O(\delta^1)$ drift kinetic equation is solved in all collisional frequency regimes. In the

collisional regime a perturbation method, which is similar to the Chapman-Enskog method [72] of kinetic theory for gases, is used to obtain the general functional structure of the first order perturbation to the particle distribution function. In essence the analysis is carried out in a rotating coordinate frame in which $\hat{f}_a$ is expanded in powers of the smallness parameter $\Delta_a = \omega_{ta}/\eta_a << 1$, where ω_{ta} is the transit frequency of the (a) specie particle around the magnetic axis, and η_a is the collision frequency. The radial drift motion of the particle's guiding center due to the magnetic field inhomogeneities and curvature, and the centrifugal and coriolis forces, appear as an $O(\Delta_a^1)$ perturbation to the guiding center's free streaming motion along the magnetic field lines in the frame which is moving with the plasma.

In the long mean free path regime the drift kinetic equation is solved by expanding the first order perturbation to the particle distribution function in powers of $\gamma_a^* << 1$. Consequently collisional effects are treated as a perturbation to the free streaming and radial motion of the guiding center. For a strongly rotating plasma, the radial motion of the particle's guiding center as seen by an observer in the frame moving with the plasma, is driven by "ficticious forces" as well as the gradient and curvature of the magnetic field lines. In addition the centrifugal force, which arises from the beam induced rotation, pushes the ions

toroidally outward creating a higher electrostatic potential there. As a result the equilibrium effective electrostatic field could be as important as the magnetic field inhomogenities thereby resulting in effective electrostatic potential trapping effects as well as modifying the magnetic trapping boundaries of the plasma. In effect, the location of the boundary between trapped and untrapped regimes (and therefore the corresponding fraction of trapped particles) becomes dependent on the system Hamiltonian. To accomodate these trapping effects, the pitch angle variable is defined in terms of the total system energy and the ensuing analysis is carried out in a manner which is consistent with the conventional theory [22,30-35].

In the plateau regime the solution to the $O(\delta^1)$ drift kinetic equation is obtained by making an asymptotic expansion of the plateau regime distribution function in terms of the small effective mirroring force (i.e. the mirror force plus the effective electrostatic potential) along the magnetic field lines. To accomodate the effects of neutral beam injection and strong plasma rotation, the analysis was carried out in a shifted velocity coordinate frame with the total collisional response of the plasma being characterized by a term which represents the effect of the beam's collisional interactions with the background particles. Furthermore, this analysis encompasses those resonant particles which arise from the effective electro-

static as well as magnetic field detrapping effects.

In the last section of this chapter the functional expression for the particle distribution function, which was obtained in the previous sections of this chapter, are used to develop constitutive relationships for the collisional and heat friction operators, the external momentum and energy flux source terms, the viscous and energy stress tensors and the beam viscous stress tensor. In particular, it is shown that the neoclassical parallel friction-flow and viscous stress constitutive relationships are linearly dependent on the hydrodynamic flows and their spatial gradients respectively. Furthermore, the lowest order unaveraged version of these constitutive relationships vary poloidally over a flux surface, a result which is characteristic of a strongly rotating beam injected plasma. In addition since the beam ions themselves are collisionally coupled to the background ion species, the functional structure of the parallel friction-flow constitutive relationship are modified so that they possess an additional beam flow contribution. Likewise, the parallel friction-flow coefficients themselves will exhibit a functional characteristic which reflects the direct coupling of the plasma species to the collisional momentum exchange with the energetic beam ions. Finally, the gyroangle dependent component of the particle distribution function is used in conjunction with the parallel component of the

stress tensor and the neoclassical component of the parallel viscosity constitutive relationship to develop closure relationships which characterize the effects of strong radial momentum transfer as well as strong plasma rotation.

In the last chapter of this thesis the experimental aspects of beam injection tokamaks are reviewed. In particular, plasma rotation experiments are examined and qualitatively compared to the theoretical results obtained in this thesis. Next, the relavent experimental data obtained from beam driven impurity ion flow reversal measurements are reviewed. Finally, the fluid formalism is used in conjunction with the kinetically derived constitutive relationships to obtain an expression for the radial particle flux for a mixed regime beam injected plasma. In this context, the theory of particle transport in the presence of external momentum source is evaluated for a two specie plasma composed of a high Z impurity ion and a dominant hydrogenic ion species. The analysis is carried out for the large aspect ratio/low beta limit case for clarity.

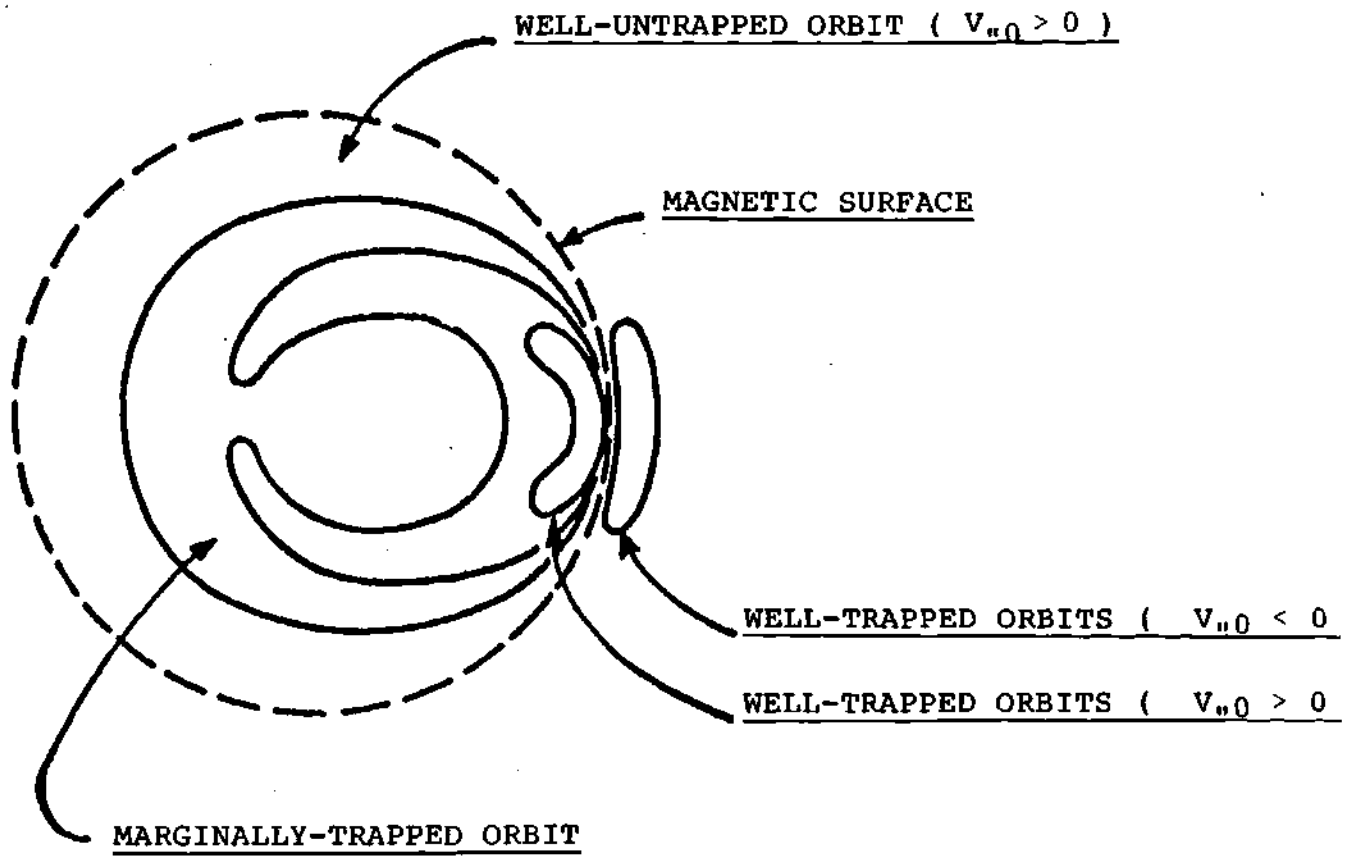

FIGURE (1.1-1)

PARTICLE ORBITS IN A TOKAMAK

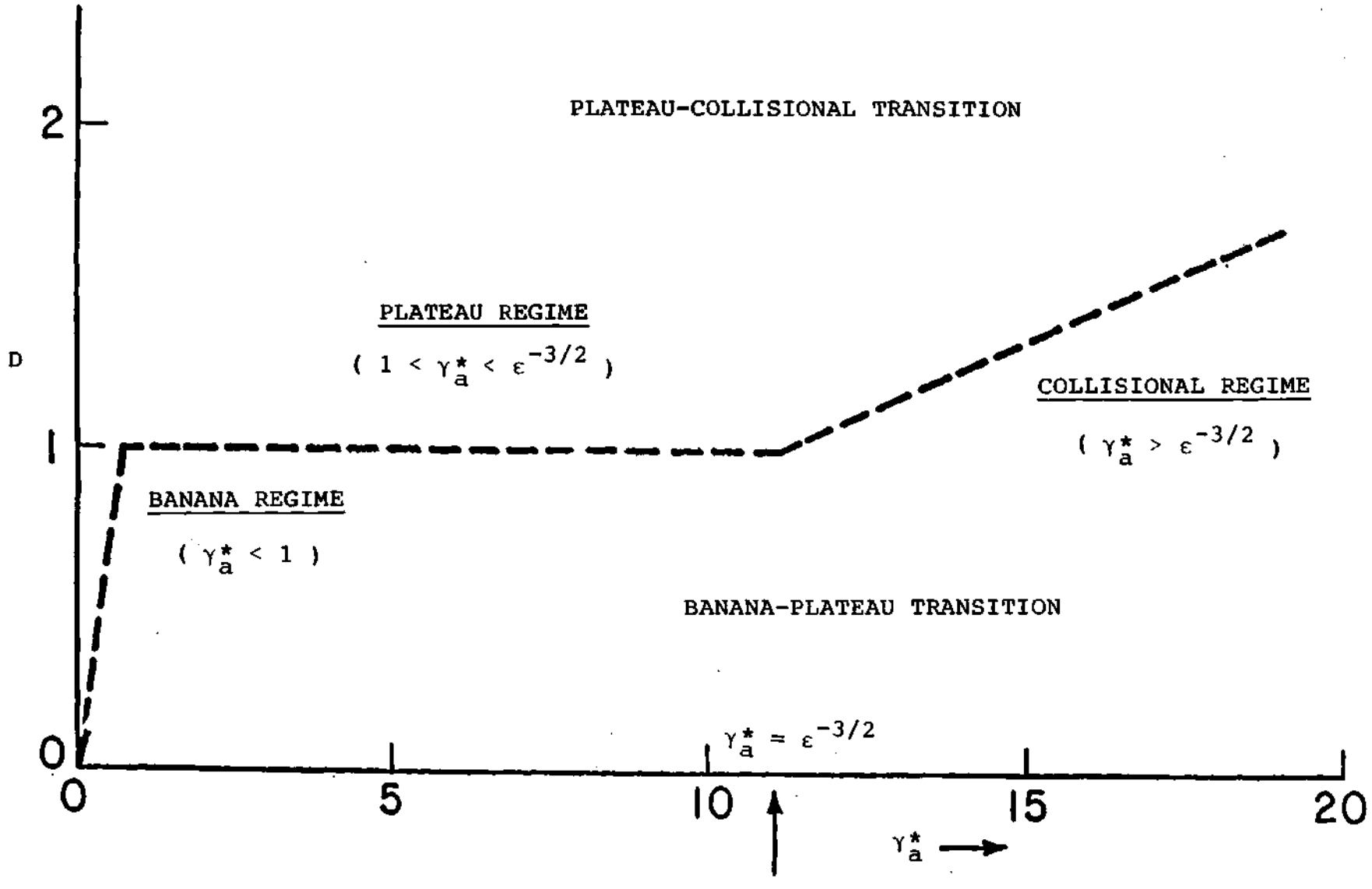

FIGURE (1.1-2)

THE COLLISION FREQUENCY REGIMES

CHAPTER II

THE TRANSPORT EQUATIONS GOVERNING A STRONGLY ROTATING BEAM INJECTED PLASMA

2.1 INTRODUCTION

In this chapter the fundamental structure and properties of the kinetic and fluid transport equations characterizing a strongly rotating beam injected plasma are explored. In addition the principal components which drive the radial transport particle and heat fluxes are identified and the underlying physical processes which are responsible for these fluxes are exposed.

In section 2.2 a set of kinetic equations is derived which governs the behavior of the particle distribution function in a strongly rotating beam injected plasma. Since intense beam injection results in particle flow speeds which are comparable in magnitude to the ion thermal speed, the derivation is carried out in a reference frame which is moving relative to the lab frame. In particular the particle distribution function, particle flow and electrostatic potential are expanded in powers of the gyroradius parameter and a set of kinetic equations which governs the functional characteristics of both the gyroangle dependent and gyrotropic components of the particle distribution function, is developed.

In section 2.3 the functional structure and general properties of the linearized Fokker-Planck collision operator are reviewed. By expanding the field particle distribution function in terms of spherical harmonics, the various components of the collision operator are grouped in accordance to their harmonic constituents. Next, the contribution of the differential test particle and field particle collision integral operators are approximated by using Laguerre polynomials as trial functions and invoking the conservation properties of the Fokker-Planck operator to effectively renormalize the Laguerre expansion. As a result, the collision operator is transformed from an integro-differential to an algebraic operator thereby rendering the kinetic equations amenable to analytic solution. Finally a collision operator, which describes the plasma field response to collisions with the injected beam ions, is formulated.

In section 2.4 the multispecies moment equations are derived from a generalized tensor transfer equation which is referenced to a moving frame thereby establishing a fluid basis for particle and heat transport theory in a strongly rotating beam injected plasma. Once developed, the fluid equations are converted into a form which is conducive to the study of transport phenomena by averaging these equations over a magnetic surface. This section is concluded with a brief discusion outlining the modifications

which must be made to the conventional transport ordering scheme in order to accomodate the effects of strong plasma rotation.

In the final section of this chapter the functional structure of the radial transport fluxes and the hydrodynamic and beam flows are investigated. Specifically, the mathematical structure of the momentum viscous drag force is elucidated and the various components which drive the cross field particle and heat transport fluxes are identified. Finally a general discussion of the fluid formulism is presented in which a self-consistent method, which determines the radial fluxes in terms of the flows and therefore the thermodynamic driving forces, is outlined.

2.2 THE KINETIC EQUATIONS GOVERNING A STRONGLY ROTATING BEAM INJECTED PLASMA

Traditionally, neoclassical transport calculations have been carried out for tokamaks in which it was assumed that the toroidal mass flow was small in comparison to the ion thermal velocity. With neutral beam injection, toroidal rotation of the plasma results and the observed velocities often exceed values required for the existing theory to remain valid. It then becomes necessary to generalize the existing kinetic analysis to incorporate the new state variable of an arbitrarily large toroidal rotation. In this section a set of generalized kinetic equations, which govern the characteristics of the gyroangle dependent and gyrotropic components of the particle distribution function, are developed for a strongly rotating beam injected plasma.

In the context of statistical mechanics, a multispecies plasma can be represented by a microcanonical ensemble which is composed of many particles, the states of which can be designated by a point in a multidimensional phase space. Characterizing the phase space point density by the distribution function $f_a(\vec{q},\vec{p},t)$, then it can be shown that if the velocity and acceleration of each particle is finite then the time evolution of the phase space volume element $d^6\tau = J(\vec{q},\vec{p},t)d\vec{q}d\vec{p}$ can be represented by a contact

transformation of the canonical coordinates in phase space [73,74]. Furthermore since Poincare's integral invariance theorem asserts that any volume element of phase space will remain invariant under a contact transformations, then $d^6\tau$ cannot vary with time [74,75]. Mathematically, this theorem implies that for any infinitesimal density element $dN_a = f_a d^6\tau$ then

$$d(dN_a)/dt = df_a/dt = \partial f_a/\partial t + \sum_i(\dot{q}_i \partial f_a/\partial q_i + \dot{p}_i \partial f_a/\partial p_i) = 0 \tag{2.2-1}$$

implying that the phase space volume element is conserved, i.e.

$$d(\ln d\tau)/dt = \sum_i(\partial \dot{q}_i/\partial q_i + \partial \dot{p}_i/\partial p_i) + d(\ln J(q,p,t))/dt = 0 \tag{2.2-2}$$

where $J(\vec{q},\vec{p},t)$ is the phase space Jacobian for the canonical basis $\{\vec{q},\vec{p},t\}$.

When the ensemble of particles is in statistical equilibrium the number of particles in a given state must be constant in time, which is to say that the density of points in a given location in phase space does not change with time. Furthermore by choosing the phase space density to be a function of the constants of the motion of the system, then the Poisson's brackets with the system Hamiltonian must vanish thereby insuring energy conservation [75]. Exact energy conservation and validity of Liouville's theorem are

both necessary conditions for expressing the equilibrium distribution function solely in terms of the constants of the motion [75]. When these conditions are not satisfied the equilibrium distribution function is no longer constant along the particle trajectories in phase space. In this case a Maxwellian-Boltzmann distribution function is not a legitimate equilibrium distribution function.

The inclusion of interspecies collisional and external source effects result in the phase space paths of the particles being discontinuous. In essence during a collisional interaction a particle changes its velocity space vector suddenly which leads to a disapperance of the representative point in one region of phase space and its simultaneous appearance somewhere else. Consequently eq.(2.2-1) becomes inhomogenous and assumes the general form

$$df_a/dt = C(f_a) + S(f_a) \tag{2.2-3}$$

where $C(f_a)$ represents the Fokker-Planck collision operator and $S(f_a)$ is an external source term. Since this thesis deals with strongly rotating plasmas, it is convenient to express the total time derivative operator in terms of a coordinate frame which is moving with the average momentum $\vec{p}_a = m_a\vec{v}_a$. Utilizing the coordinate basis $\{\vec{r},\vec{V},t\}$ where $\vec{q} = \vec{r}$, $\vec{P} = \vec{p} - \vec{p}_a$ and the canonical momentum is related to the particle kinetic momentum via the

expression $\vec{p} = m_a\vec{v} + e_a\vec{A}$, then eq.(2.2-3) becomes

$$\partial f_a/\partial t + (\vec{V} + \vec{v}_a)\cdot\vec{\nabla}f_a + (\vec{V} + \vec{v}_a)\cdot[(\vec{\nabla}V_{\parallel})\hat{n}_{\parallel}\cdot\vec{\nabla}_V f_a + (\vec{\nabla}V_{\perp})\hat{V}_{\perp}\cdot\vec{\nabla}_V f_a + (\vec{\nabla}\zeta)(\hat{n}_{\parallel}\times\vec{V}_{\perp}/V_{\perp})\cdot\vec{\nabla}_V f_a] + [e_a\vec{E}/m_a - \partial\vec{v}_a/\partial t - (\vec{V} + \vec{v}_a)\cdot\vec{\nabla}\vec{v}_a - \vec{\Omega}_a\times(\vec{V} + \vec{v}_a)]\cdot\vec{\nabla}_V f_a = C(f_a) + S_a(f_a). \tag{2.2-4}$$

Here the velocity space vector $\vec{V}$ has the elements $\{V_{\parallel}, V_{\perp},\zeta\}$ where ζ is the instantaneous gyroangle defined by the directional unit vector $\hat{e}_{\perp} = (\cos\zeta)\hat{e}_1 + (\sin\zeta)\hat{e}_2$ with the unit vector basis $\{\hat{e}_1,\hat{e}_2,\hat{n}_{\parallel}\}$ forming a local orthogonal system and

$$\vec{\nabla}V_{\parallel} = \hat{e}_{\perp}\cdot\vec{\nabla}\hat{n}_{\parallel} \quad ; \quad \vec{\nabla}V_{\perp} = -(V_{\parallel}/V_{\perp})\hat{e}_{\perp}\cdot\vec{\nabla}\hat{n}_{\parallel} \quad ; \quad \vec{\nabla}\zeta = (V_{\parallel}/V_{\perp})\partial\hat{e}_1/\partial\zeta + (\vec{\nabla}\hat{e}_2)\cdot\hat{e}_1 \quad ; \quad \vec{\nabla}_V = \hat{n}_{\parallel}\partial/\partial V_{\parallel} + \hat{V}_{\perp}\partial/\partial V_{\perp} + (\hat{n}_{\parallel}\times\vec{V}_{\perp}/V_{\perp})\partial/\partial\zeta \tag{2.2-5}$$

with $\vec{\nabla}$ being a configuration space operator taken at constant $\vec{V}$. Unfortunately the effects of interparticle and beam particle collisions disrupt the Liouvillian nature possessed by the phase space conservation equation (c.f. eq.(2.2-1)). Consequently a generalization of Liouville's theorem is needed to accomodate collisional effects thereby

preserving the desired properties of the lowest order equilibrium particle distribution function.

In the conventional theory for toroidally confined axisymmetric plasmas the ion gyroradius and the pitch of the helical trajectory are small compared to the dimensions of inhomogenity. Defining the gyroradius parameter δ as the ratio of the ion Larmor radius to a scale length for changes in macroscopic quantities, then in the strongly magnetized limit $\delta << 1$ the approximate motion of a charged particle in a slowly varying magnetic field can be described by the guiding center approximation [76-78]. In essence this approximation allows the particle's trajectory in a plane perpendicular to the magnetic field to be represented as a superposition of the Larmor revolution and a drift of the gyro-orbit or guiding center. As a result the particle distribution function can be decomposed into a gyroangle dependent component $\tilde{f}_a = 1/(2\pi)\int_0^{2\pi} f_a(\zeta)d\zeta = D_\zeta(f_a)$ and a gyrotropic component $\hat{f}_a = f_a - \tilde{f}_a$, where ζ is the gyroangle. Therefore to obtain a solution to eq.(2.2-3) the particle distribution function is expanded in powers of the gyroradius parameter δ , i.e.

$$f_a = \sum_K f_{aK} = f_{a0} + f_{a1} + f_{a2} + \cdots \tag{2.2-6}$$

where $f_{aK} \sim O(\delta^K)$ and the lowest order average velocity $\vec{v}_{a0}$ is assumed to be comparable in magnitude to the ion

thermal speed. Furthermore the time dependence of the particle distribution function is assumed to occur on well separated time scales so that the time derivatives may be formally expanded [72]:

$$\partial/\partial t = \sum_K \partial/\partial t_K = \partial/\partial t_0 + \partial/\partial t_1 + \partial/\partial t_2 + \cdots \tag{2.2-7}$$

where $\partial/\partial t_K \sim O(\delta^K \omega_{ta})$ with $\omega_{ta} = v_{ta}/\ell$ being the ion transit frequency (here ℓ is the connection length). Similarly, the electric field vector is expanded in powers of δ such that

$$\vec{E} = \sum_K \vec{E}_{K-1} = \vec{E}_{-1} + \vec{E}_0 + \vec{E}_1 + \cdots \tag{2.2-8}$$

where here the leading term has been denoted by -1 since it is one order larger than the drift ordering used in the small rotation limit. In addition with the assumption that no rapid temporal changes in the magnetic field takes place, then the field vectors $\vec{E}_{-1}$ and $\vec{E}_0$ must be electrostatic.

Since the ion flow velocity is considered to be as large as the ion thermal velocity, then the term associated with the most rapid change in eq.(2.2-4) is $(\vec{\nabla}\Phi_{-1} + \vec{B} \times (\vec{V} + \vec{v}_{a0})) \cdot \vec{\nabla}_V f_{a0}$. The requirement of steady-state on the time scale of an ion gyromotion yields

$$(\vec{\nabla}\Phi_{-1} + [\vec{B} \times \vec{v}_{a0}]) \cdot \vec{\nabla}_V f_{a0} = (\vec{V} \times \vec{B}) \cdot \vec{\nabla}_V f_{a0} \ . \tag{2.2-9}$$

In order for the above expression to be satisfied for all values of $\vec{V}$,then

$$(\vec{\nabla}\Phi_{-1} + [\vec{B} \times \vec{v}_{a0}]) \cdot \vec{\nabla}_V f_{a0} = (\vec{V} \times \vec{B}) \cdot \vec{\nabla}_V f_{a0} = 0 \tag{2.2-10}$$

implying that the lowest order distribution function is independent of gyroangle. Furthermore assuming that the magnetic field vector in an axisymmetric system can be represented in the contravariant form [79-81]

$$\vec{B} = \gamma'/(2\pi)(\hat{e}_\phi \times \hat{e}_\psi) + I\hat{e}_\phi \tag{2.2-11}$$

then the constraint $\vec{\nabla}\Phi_{-1} + \vec{B} \times \vec{v}_{a0} = 0$ implies that in general

$$\vec{v}_{a0} = \kappa_a(\psi)\vec{B} + \omega_{-1}(\psi)R^2\hat{e}_\phi \tag{2.2-12}$$

where $\kappa_a(\psi)$ is an arbitrary flux function and

$$\omega_{-1}(\psi) = -2\pi/\gamma'(\partial\Phi_{-1}/\partial\psi) \tag{2.2-13}$$

is the angular speed of rotation. Here, the spatial coordinate basis $\vec{r} = \{\psi, \chi, \phi\}$ has been introduced where the radial coordinate ψ labels the magnetic surfaces which are defined by the relation $\vec{B} \cdot \vec{\nabla}\psi = 0$, and χ and ϕ are angular coordinates defined such that χ (poloidal

angle) increases by 2π the short way around the torus on a magnetic surface and ϕ (toroidal angle) increases by 2π the long way around the torus on a magnetic surface [79-81]. In addition γ' and I are surface functions which are related to the poloidal and toroidal magnetic flux densities and are defined such that $\gamma' = \partial\gamma/\partial\psi = 2\pi\sqrt{g}\vec{B}\cdot\hat{e}_\chi$ and $I = R^2\vec{B}\cdot\hat{e}_\phi$ respectively, where the contravariant vector basis $\{\hat{e}_\psi\ \hat{e}_\chi\ \hat{e}_\phi\}$ has been defined in terms of the gradient of the spatial coordinates

$$\hat{e}_\psi = \vec{\nabla}\psi \quad ; \quad \hat{e}_\chi = \vec{\nabla}\chi \quad ; \quad \hat{e}_\phi = \vec{\nabla}\phi \ . \tag{2.2-14}$$

To obtain the functional structure of the zeroth order particle distribution function the zeroth order time scale kinetic equation [c.f. eq.(2.2-3)] must be solved:

$$\begin{aligned}
&\partial f_{a0}/\partial t_0 + (\vec{V}_\parallel + \vec{v}_{a0})\cdot\vec{\nabla}f_{a0} - [e_a\vec{\nabla}\Phi_0/m_a + \hat{n}_\parallel\cdot(\partial\vec{v}_{a0}/\partial t_0 + \\
&(\vec{V}_\parallel + \vec{v}_{a0})\cdot\vec{\nabla}f_{a0}) + (V_\perp\hat{n}_\parallel\cdot\vec{\nabla}\ln B/2)\hat{n}_\parallel\cdot\vec{\nabla}_V f_{a0} + (V_\perp\vec{V}_\parallel\cdot\vec{\nabla}\ln B)/2 \\
&+ V_\perp^2/2(\hat{n}_\parallel\hat{n}_\parallel:\vec{\nabla}\vec{v}_{a0} - \vec{\nabla}\cdot\vec{v}_{a0})]\vec{V}_\perp\cdot\vec{\nabla}_V f_{a0} = \sum_b C_{ab}(f_{a0}, f_{b0}) \ .
\end{aligned} \tag{2.2-15}$$

Note that in obtaining the above expression, $\Omega_a\partial f_{a0}/\partial\zeta = (\vec{V} + \vec{v}_{a0})\cdot(\hat{n}_\parallel \times \vec{V}_\perp/V_\perp)\vec{\nabla}\zeta\cdot\vec{\nabla}_V f_{a0} = 0$ since $f_{a0} \neq f_{a0}(\zeta)$. Likewise since to this order approximation interparticle collisional effects are dominant in comparison to the direct

beam particle collisional interactions, then the external source term is neglected in eq.(2.2-15). To obtain a solution to eq.(2.2-15) both sides of this equation are multiplied by $-\ln f_{a0}$ and the result integrated over velocity space and flux surface averaged to annihilate the free streaming term thereby yielding

$$\langle \partial S_a/\partial t_0 \rangle \geq \langle K_a \rangle \tag{2.2-16}$$

where $S_a = -\int_{\vec{V}} (f_{a0} \ln f_{a0} - f_{a0}) d^3V$ is the entropy density [72],

$$K_a = -\sum_b \int_{\vec{V}} \ln f_{a0} C_{ab}(f_{a0}, f_{b0}) d^3V \tag{2.2-17}$$

and the inequality reflects the monotonic increase of entropy due to collisions [72]. After several collision times a steady state is achieved for which $C_{ab} = 0$ implying that

$$f_{a0} = n_{a0}(\chi,\psi)/(\pi v_{ta}^2)^{3/2} e^{-(V/v_{ta})^2} \tag{2.2-18}$$

where $\vec{V} = \vec{v} - \vec{v}_{a0}$ is the particle velocity in the frame moving with the plasma. In essence the above expressions are a consequence of the well known Boltzmann H-Theorem [74]. As a result the probability of finding a particle in a multidimensional unit volume of phase space is uniform

thereby preserving the desired Liouvillian nature of the kinetic equation inclusive of interparticle collisional effects. Upon combining eqs.(2.2-18) with (2.2-15) yields a system of constraint equations in terms of the various powers of V and their products from which it can be shown that [60,63]

$$n_{a0}(\chi,\psi) = N_a(\psi)e^{-[e_a\Phi_0/T_{a0} - (v_{a0}/v_{ta})^2]} \tag{2.2-19}$$

and

$$\vec{v}_{a0} = \omega_{-1}(\psi)R^2\hat{e}_\phi \quad ; \quad (\text{i.e. } \kappa_a(\psi)\vec{B} = 0) \quad ; \quad T_{a0} = T_{a0}(\psi) \tag{2.2-20}$$

Eqs.(2.2-18) through (2.2-20) imply that the lowest order response of the plasma to beam induced rotation is to act as a "rigid rotor" with the coordinate frame being characterized by a uniform angular speed and the particle distribution function in the frame moving with the plasma being Maxwellian.

To account for the direct and indirect beam induced effects in the $O(\delta^1)$ approximation, it becomes necessary to depart from the existing literature where it is assumed that the beam's interaction with the background plasma and momentum drag effects are treated as small order effects ($\geq O(\delta^2)$) or neglected altogether. More specifically, the neglect of the external source term's interaction with the

background plasma in the $O(\delta^1)$ approximation may be error since the experimental response of present generation tokamaks to external momentum injection indicates that a radial transfer of momentum (radial viscous drag) occurs shortly after the momentum injection sequence commences [49-50]. As a result the effect of the beam's interaction with the background plasma must be examined on an interim time scale between $O(\omega_{ta})$ and $O(\delta^1\omega_{ta})$. In particular, when a neutral beam is injected into a tokamak plasma the initial buildup of toroidal rotation during the momentum injection sequence is determined by a $\vec{J} \times \vec{B}$ force which arises as a consequence of the prompt momentum transfer [48]. The creation of fast ions by ionization of injection neutrals leads to a radial current and therefore produces a buildup of charge. Since a plasma is a polarizable media a polarization current, which results from the changing radial electric field, acts to cancel the fast ion creation current and the ensuing force due to the polarization current transfers part of the injected momentum to the plasma. Since the prompt transfer of injected momentum is proportional to the rate of ion creation, this transfer mechanism occurs immediately after the momentum injection source is turned on. It is only after several slowing down times that the direct collisional interaction between the beam particles and the background plasma become a factor in accelerating the plasma. Once steady-state rotation is

achieved the time variation of the radial electric field, and therefore the polarization current, goes to zero. As a result the fast ion creation current must now be balanced by the plasma currents which result from the time independent fields. It is then these forces, which result from the plasma currents necessary to balance the ion creation current, which cancels the plasma drag forces in the steady-state.

To investigate the initial response of the plasma to neutral beam injection, the effects of a time dependent electric field on the radial motion of a particle's guiding center must first be examined. In this regard use is made of the fact that for an axisymmetric system the toroidal coordinate is cyclic in a Lagrangian sense. Consequently the applied torque along the axis of rotation vanishes [73] and therefore the canonical angular momentum is a constant of the motion. Mathematically,

$$dL/dt = d(R^2\hat{e}_\phi \cdot [\vec{p} + e_a\vec{A}])/dt = 0 \tag{2.2-21}$$

where $\vec{p} = m_a\vec{v}$ is the particle kinetic momentum. Noting that

$$d(R^2\hat{e}_\phi \cdot \vec{A})/dt = -R^2\hat{e}_\phi \cdot (\vec{E} + [(\vec{B}\cdot\hat{n}_\theta)dr/dt]\hat{e}_\phi) \tag{2.2-22}$$

then it follows that

$$dr/dt = 1/(\vec{B}\cdot\hat{n}_\theta)[B/(m_a\Omega_a)dp_\parallel/dt - \hat{n}_\parallel\cdot\vec{E}] \tag{2.2-23}$$

where in obtaining the above equation the large aspect ratio approximation has been employed (i.e. $\{\psi,\chi\} \to \{r,\theta\}$ and therefore $E_\phi \sim E_\parallel$) and the gyrophase averaged value of the kinetic momentum has been used. To obtain an expression for the radial excursion of the guiding center, the above equation must be averaged over a transit or bounce period. In particular the time average of the particle's guiding center along the magnetic field lines is calculated in Appendix A. Using this result in the above equation yields

$$\langle dr/dt\rangle_\tau = \delta r \approx 1/(\vec{B}\cdot\hat{n}_\theta)[RB/\Omega_a(d\hat{\omega}_{-1}(r,t)/dt) - (\hat{n}_\parallel\cdot\hat{\vec{E}})] \tag{2.2-24}$$

where

$$\hat{\omega}_{-1}(r,t) = \omega_{-1}(r,t)(1 - I[\alpha_a(r,\theta)]\delta_c) \tag{2.2-25}$$

$$\hat{n}_\parallel\cdot\hat{\vec{E}} = E_\parallel(1 - I[\alpha_a(r,\theta)]\delta_c) \tag{2.2-26}$$

$$I[\alpha_a(r,\theta)] = (\pi/2)[\int_0^1[(1 - t^2)(1 - \alpha_a(r,\theta)t^2)]^{-1/2}dt \tag{2.2-27}$$

$$\alpha_a(r,\theta) = [2\mu\delta B/[m_a(V_\parallel(t=0) - R\langle\omega_{-1}(r,t)\rangle_\tau)^2]]^{1/2} \tag{2.2-28}$$

and $\delta_c = 0,1$ for untrapped and trapped particles respec-

ively. The first term is the neoclassical polarization drift [48,82], while the second term is the conventional Ware pinch [83]. In trapped particle space the radial drift of the guiding centers is fairly significant, consequently the toroidal force per unit volume on the plasma resulting from the $\vec{J}_p \times \vec{B}_\chi$ force imparts momentum to the plasma immediately thereby supplying the initial motive force for a rapid toroidal acceleration of the plasma. In circulating space the net effect of an increasing radial electric field causes an acceleration of the untrapped particles in the direction of the $\vec{E} \times \vec{B}$ drift, perpendicular to the magnetic field, consequently the toroidal acceleration of most of the untrapped particles is small. However since the collisional drag between trapped and untrapped particles is relatively small on time scales characteristic of the initial prompt momentum transfer, then collisions between untrapped particles result in their mean parallel velocity to be equal to that of the nearly trapped particles and therefore the trapped particles since continuity is required across the trapping boundary. The net initial effect of the beam induced polarization field is then to quickly accelerate the plasma with a uniform angular frequency of rotation.

On an interim time scale between a time characteristic of several slowing down times and time scale $O(\delta^1 \omega_{ta})$, the direct beam ion collisional momentum imparted to the background plasma supplies the major portion of the motive

force to continue the toroidal acceleration of the plasma. In essence the combined effort of the $\vec{J}_p \times \vec{B}_\chi$ force and the direct beam collisional momentum exchange with the background plasma particles accelerate the plasma to its terminal velocity. However on this time scale the collisional friction between the trapped and untrapped particles modifies the polarization current and therefore the $\vec{J}_p \times \vec{B}_\chi$ momentum deposition profile. Likewise the centrifugal inertial force arising from the beam induced toroidal acceleration of the plasma drives a poloidal variation in the density, which in turn produces a poloidally asymmetric flow. The net result of the poloidal variations in the toroidal flow is the appearance of a gyroviscous drag force which orginates from the geometric misalignment of the flux surfaces relative to the surfaces of angular frequency [61]. This departure from rigid body rotation drives a gyroviscous drag force which transfers momentum radially from the center of the plasma.

To obtain the functional structure of the lowest order poloidally asymmetric toroidal flow, a kinetic equation which encompasses the lowest order beam effects must be developed. In this endeavor one is guided by the fact that the zeroth order distribution function is given exactly by a pure drifting Maxwellian (a Maxwellian distribution function in the coordinate frame moving with a uniform angular velocity (c.f. eq.(2.2-18)). Consequently to account for the

lowest order direct and indirect beam induced effects, the lowest order particle distribution function can be expressed as follows:

$$f_{a0} = f_{a0}^{(0)} + f_{a0}^{(1)} \tag{2.2-28}$$

where $f_{a0}^{(0)}$ is a pure drifting Maxwellian and $f_{a0}^{(1)}$ represents a perturbation to $f_{a0}^{(0)}$, the magnitude of which is assumed to be somewhere between zeroth and first order in δ. Furthermore since by assumption $f_{a0}^{(1)} < O(\delta)$, then this component of the particle distribution function will be independent of gyroangle (i.e. since $\tilde{f}_a \sim O(\delta^1) f_{a0}^{(0)}$ then $f_{a0}^{(1)} \sim \hat{f}_{a0}^{(1)}$). It is desired to construct a kinetic kinetic equation for $\hat{f}_{a0}^{(1)}$ which explicitly accounts for the beam induced polarization drift and beam collisional effects. Furthermore this equation must be constructed in such a manner that the lowest order equilibrium distribution will be Maxwellian, thereby satisfying the generalized version of Liouville's equation (conservation of entropy via the Boltzmann H-theorem). To accomplish this task a gauge transformation [84-86] of the magnetic vector potential is made

$$\vec{A} \rightarrow \vec{A}^* = \vec{A} + m_a(\vec{V} - \vec{u}_E^{(0)})/e_a \tag{2.2-29}$$

where $\vec{u}_E^{(0)} = \vec{v}_{a0} = \omega_{-1}(\psi) R^2 \hat{e}_\phi$ is the zeroth order velocity

of the coordinate frame. In view of eq.(2.2-29) it follows that the system Lagrangian in the frame moving with the plasma assumes the general form [73,86]:

$$L = e_a \vec{V} \cdot \vec{A}^* - H \tag{2.2-30}$$

where

$$H = m_a (V^2 - (u_E^{(0)})^2)/2 + e_a \Phi_0$$

is the system Hamiltonian. Employing the guiding center coordinates $\{\vec{R}_{gc}, \vec{V}_{gc}, V_\parallel, t\}$ where $\vec{R}_{gc} = \vec{r} - \hat{n}_\parallel \times \vec{V}/\Omega_a$ is the position vector for the guiding center, $\vec{V}_{gc}$ is the guiding center velocity, and $V_\parallel$ is the particle's velocity along the magnetic field lines, in conjunction with Lagrange's equations of motion [73] yields the modified Lorentz force equation:

$$(dp_{\parallel a}/dt)\hat{n}_\parallel = (e_a \vec{E}^{A*} - \vec{\nabla} H) + e_a \vec{V}_{gc} \times \vec{B} \tag{2.2-31}$$

where $P_\parallel = m_a V_\parallel$ is the parallel kinetic momentum of the guiding center in the frame moving with the plasma. Here the modified field vectors [85,86] $\vec{E}^{A*}$ and $\vec{B}^*$ are defined such that

$$\vec{E}^{A*} = -\partial \vec{A}^*/\partial t = -\partial \vec{A}/\partial t - m_a/e_a [V_\parallel \partial \hat{n}_\parallel/\partial t - \partial \vec{u}_E^{(0)}/\partial t] \tag{2.2-32}$$

and

$$\vec{B}^* = \vec{\nabla} \times \vec{A}^* = \vec{B} + m_a \vec{\nabla} \times (\vec{V}_{\parallel} - \vec{u}_E^{(0)})/e_a \tag{2.2-33}$$

respectively. Note that in implementing Lagrange's equation the scalar magnetic moment is an adiabatic invariant [78] to this order approximation. Decomposing eq.(2.2-31) into an equation for the guiding center velocity and its parallel acceleration along the magnetic field lines yields:

$$\vec{V}_{gc} = V_{\parallel}\vec{B}^* + (\vec{E}^{A*} - \vec{\nabla}H/e_a) \times \hat{n}_{\parallel}/(\hat{n}_{\parallel} \cdot \vec{B}^*) \tag{2.2-34}$$

and

$$dV_{\parallel}/dt = \dot{V}_{\parallel} = \vec{V}_{gc} \cdot (e_a\vec{E}^{A*} - \vec{\nabla}H)/(m_a V_{\parallel}) \ . \tag{2.2-35}$$

Now it is shown in Appendix C that the phase space basis $\{\vec{R}_{gc}, \vec{V}_{gc}, \vec{V}_{\parallel}, t\}$ in conjunction with eq.(2.2-31), the definition of the modified field vectors, and Maxwell's equations are sufficient to satisfy eq.(2.2-2). Consequently the resulting collisionless drift kinetic equation will be Liouvillian. As a result the desired kinetic equation assumes the form [c.f. eqs.(2.2-31), (2.2-34) and (2.2-35)]:

$$df_a/dt = \partial f_a/\partial t + [V_{\parallel}\vec{B}^*/(\hat{n}_{\parallel} \cdot \vec{B}^*) + (\vec{E}^{A*} - \vec{\nabla}H/e_a) \times \hat{n}_{\parallel}] \cdot [\vec{\nabla} f_a$$
$$+ ((e_a\vec{E}^{A*} - \vec{\nabla}H)\vec{V}_{\parallel} \cdot \vec{\nabla}_V f_a)/(m_a V_{\parallel}^2)] = \sum_b (C_{ab}(f_a, f_b) + S_{aB}(f_{a0}^{(0)}, f_B) \tag{2.2-36}$$

In addition, replacing f_{a0} with $f_{a0}^{(0)}$, multiplying the above expression by $-\ln f_{a0}^{(0)}$, neglecting the external source term and integrating over all velocity space yields the same entropy conservation equation as that given previously. As a result $f_{a0}^{(0)}$ will be a pure drifting Maxwellian function as desired. Therefore combining eqs. (2.2-18) and (2.2-31) with (2.2-36), transforming from the guiding center basis to the energy basis $\{\vec{r},H,\mu,t\}$, and neglecting all terms $> O(\delta^1)$ yields

$$\vec{V}_{\parallel}\cdot\vec{\nabla}f_{a0}^{(1)} + 2\pi V_{\parallel}/\gamma'\cdot\vec{\nabla}[I\hat{n}_{\parallel}\cdot(\vec{V} + \vec{u}_E^{(0)})/\Omega_a\partial\ln f_{a0}^{(0)}/\partial\psi + m_a/e_a(I\hat{n}_{\parallel}\cdot(\vec{V} + \vec{u}_E^{(0)})/(v_{ta}B))^2\partial(R^{-1}\vec{u}_E^{(0)}\cdot\hat{n}_{\phi})/\partial\psi]f_{a0}^{(0)} = 2\vec{V}_{\parallel}/v_{ta}^2\cdot(\partial\vec{u}_E^{(0)}/\partial t)f_{a0}^{(0)} + \sum_b(C_{ab}(f_{a0}^{(1)},f_{b0}^{(1)}) + S_{aB}(f_{a0}^{(0)},f_B)) \tag{2.2-37}$$

where here it has been assumed that $(B_\chi/B_\phi)^2 << 1$, a condition which characterizes present generation tokamaks.

Further reduction of eq.(2.2-37) to the desired order approximation can be accomplished by examining the relative order of the terms apppearing in this equation. In particular noting that

$$2\pi IV_{\parallel}/(\gamma'\Omega_a)\partial f_{a0}^{(0)}/\partial\psi \cong B_\phi Rv_{ta}|\vec{\nabla}f_{a0}^{(0)}|/(\Omega_a|\hat{e}_\psi|) \cong r_\chi|\vec{\nabla}f_{a0}^{(0)}| \cong \delta_\chi f_{a0}^{(0)} \tag{2.2-38}$$

and

$$2\pi IV_{\parallel}(I\hat{n}_{\parallel}\cdot\vec{u}_E^{(0)}/B)/(\gamma'\Omega_a)\partial(R^{-1}\vec{u}_E^{(0)}\cdot\hat{n}_\phi)/\partial\psi \cong B_\phi R^3 v_{ta}|\vec{\nabla}\omega_{-1}^2(\psi)|$$
$$/(\Omega_a|\hat{e}_\psi|) \cong r_\chi(R^2|\vec{\nabla}\omega_{-1}(\psi)|) \cong (\vec{u}_E^{(0)}\cdot\hat{n}_\phi)\delta_\chi \tag{2.2-39}$$

then

$$2\pi IV_{\parallel}/(\gamma'\Omega_a)\partial f_{a0}^{(0)}/\partial\psi \sim 2\pi IV_{\parallel}(I\hat{n}_{\parallel}\cdot\vec{u}_E^{(0)}/B)/(\gamma'\Omega_a)\partial(R^{-1}\vec{u}_E^{(0)}$$
$$\cdot\hat{n}_\phi)/\partial\psi < O(\delta^1) \tag{2.2-40}$$

since $\delta_\chi/\delta = (B/B_\chi) > 1$ for $(B_\chi/B_\phi) < 1$. Integrating eq.(2.2-37) over all velocity space yields

$$n_a\vec{V}_{\parallel a}^{(1)} = -2\pi I/(\gamma' e_a B)(\partial p_a/\partial\psi + e_a n_a[\partial\Phi_0(\chi,\psi)/\partial\psi + m_a/e_a$$
$$(\partial(u_E^{(0)2}/2)/\partial\psi - \vec{u}_E^{(0)}\cdot\hat{e}_\phi\partial(R^2\vec{u}_E^{(0)}\cdot\hat{e}_\phi)/\partial\psi)])\hat{n}_{\parallel} + \kappa_a(\psi)\vec{B} \tag{2.2-41}$$

where here it has been assumed that to this order approximation the parallel flow is incompressible. This is a good approximation since $n_B/n_a << 1$. It should be noted that although the beam particle density is small in comparison to the plasma ion density, the momentum deposited per unit volume is quite large. Furthermore since by assumption $\tilde{f}_a/\hat{f}_{a0}^{(1)} << 1$, then $V_{\perp a}/V_{\parallel a}^{(1)} << 1$ and there-

fore $V_{\parallel}/B \sim V_{\phi}/B_{\phi}$. As a result, to the lowest order approximation

$$\vec{V}_a^{(1)} \cong \omega_0(\chi,\psi) R^2 \hat{e}_{\phi} \tag{2.2-43}$$

where

$$\omega_0(\chi,\psi) = -2\pi/(\gamma' e_a n_a)(\partial p_a/\partial\psi + e_a n_a[\partial\Phi_0(\chi,\psi)/\partial\psi + m_a/e_a (\partial(u_E^{(0)^2}/2)/\partial\psi - \vec{u}_E^{(0)}\cdot\hat{e}_{\psi}\partial(R^2\vec{u}_E^{(0)}\cdot\hat{e}_{\phi})/\partial\psi)]) + \kappa_a(\psi)B/(n_a R)$$

is the angular frequency of rotation. Note that in obtaining eq.(2.2-43) it has been assumed that to this order approximation the plasma mass flow is essentially in the toroidal direction. In effect, eq.(2.2-43) represents the lowest order correction to the zeroth order angular speed of rotation on a time scale between $O(\omega_{ta})$ and $O(\delta^1\omega_{ta})$. Physically the centrifugal inertia due to the beam induced polarization and collisional acceleration of the plasma has caused a distortion in the uniform toroidal motion of the plasma resulting in poloidal variations in the bulk toroidal mass flow.

The results obtained thus far suggest that the kinetic analysis for beam injected plasmas should be carried out in

a coordinate frame moving with the average velocity

$$\vec{v}_a = \vec{u}_{aE} = \vec{u}_E^{(0)} + \vec{V}_a^{(1)} = (\omega_{-1}(\psi) + \omega_0(\chi,\psi))R^2\hat{e}_\phi \tag{2.2-44}$$

when obtaining higher order corrections to the drifting Maxwellian, thereby implicity accounting for the lowest order beam induced effects. Consequently, it follows that the desired kinetic equation which must be solved is of the general form:

$$\partial f_a/\partial t + (\vec{V} + \vec{u}_{aE})\cdot\vec{\nabla}f_a + (\vec{V} + \vec{u}_{aE})\cdot[(\vec{\nabla}V_\parallel)\hat{n}_\parallel\cdot\vec{\nabla}_V f_a + (\vec{\nabla}V_\perp)\hat{V}_\perp\cdot\vec{\nabla}_V f_a + (\vec{\nabla}\zeta)(\hat{n}_\parallel \times \vec{V}_\perp/V_\perp)\cdot\vec{\nabla}_V f_a] + [e_a\vec{E}/m_a - \partial\vec{u}_{aE}/\partial t - (\vec{V} + \vec{u}_{aE})\cdot\vec{\nabla}\vec{u}_{aE} - \vec{\Omega}_a \times (\vec{V} + \vec{u}_{aE})\cdot\vec{\nabla}_V f_a = \sum_b (C_{ab}(f_{a1},f_{b1}) + S_{aB}(F_a,f_B))$$

(2.2-45)

Note that in the $O(\delta^0)$ approximation, the solution to the above equation is a drifting Maxwellian as expected.

To construct a set of kinetic equations which govern the behavior of the higher order corrections to the drifting Maxwellian, the particle distribution function and electric field vector are expanded in a perturbation series of the form:

$$f_a = F_a + \sum_{K=1} f_{aK} \tag{2.2-46}$$

and

$$\vec{E} = -\vec{\nabla}\Phi_0(\chi,\psi) + \sum_{K=1} \vec{E}_K \tag{2.2-47}$$

where F_a is a drifting Maxwellian (c.f. eq.(2.2-18)) and $f_{ak} \sim \vec{E}_k \sim O(\delta^k)$. The lowest order gyroangle dependent component of the particle distribution function can be obtained from eq.(2.2-45) by using the expansion series for f_a and $\vec{E}$ in this equation, gyroaveraging and subtracting the result from eq.(2.2-45) to give [see Appendix D]

$$\partial\tilde{f}_a/\partial\zeta = \vec{V}_\perp/\Omega_a\cdot[\vec{\nabla}\ln F_a + 2/v_{ta}^2(\vec{\nabla}\Phi_0 + \vec{\nabla}(u_E^{(0)})^2/2 - (\vec{u}_E^{(0)}\cdot\hat{e}_\phi)$$
$$\partial(R^2\vec{u}_E^{(0)}\cdot\hat{e}_\phi)/\partial\psi\,\hat{e}_\psi)]F_a + [2/v_{ta}^2(\overleftrightarrow{I} - 2\hat{V}_\perp\hat{V}_\perp - \hat{n}_\parallel\hat{n}_\parallel)V_\perp^2/2 +$$
$$2[\vec{V}_\parallel\vec{V}_\perp]_2]:\vec{\nabla}\vec{u}_{aE})]F_a/\Omega_a + O(\delta^2). \tag{2.2-48}$$

Note here that in obtaining the above equation all terms $> O(\delta^1)$ have been neglected with the exception of the term $\vec{V}_\parallel\cdot\vec{\nabla}\vec{u}_{aE}/\Omega_a$ with the assumed ordering $O(\delta^1) < \vec{V}_\parallel\cdot\vec{\nabla}\vec{u}_{aE}/\Omega_a < O(\delta^2)$ since it is this expression which will give rise to the lowest order gyroviscous drag force (see section 2.5).

Furthermore since collisional effects make a contribution to the gyroangle dependent component of the particle distribution function only in the $O(\delta^2)$ approximation [see Appendix D], then the lowest order gyroviscous drag force will be independent of collision frequency. The general solution to eq.(2.2-48) can be obtained directly by integration with the result

$$\tilde{f}_a = (\vec{V}_\perp \times \hat{n}_\parallel)/\Omega_a \cdot [(\vec{\nabla} \ln F_a + 2/v_{ta}^2 (\vec{\nabla}\Phi_0 + \vec{\nabla}(u_E^{(0)})^2/2) - (\vec{u}_E^{(0)} \cdot \hat{e}_\phi)$$
$$\partial(R^2 \vec{u}_E^{(0)} \cdot \hat{e}_\phi)/\partial\psi\, \hat{e}_\psi))F_a] + (4/v_{ta}^2 [(\vec{V}_\perp \times \hat{n}_\parallel/\Omega_a)\vec{V}_\parallel : \vec{\nabla}\vec{u}_{aE}]_2)F_a +$$
$$\text{(higher order terms)}. \tag{2.2-49}$$

Finally to develop a kinetic equation which governs the lowest order transport processes across the magnetic field lines, the $O(\delta\omega_{ta})$ time scale version of eq.(2.2-45) must be considered. Assuming a steady state condition to be established on this time scale then eqs.(2.2-46) through (2.2-49) can be combined with eq.(2.2-45) and the result gyroaveraged to give the desired result. Upon carrying out the gyroaveraging process and retaining only terms of order $\leq O(\delta^1)$ it can be shown that the desired kinetic equation assumes the general form (see Appendix D):

$$\vec{V}_{\parallel}\cdot\vec{\nabla}\hat{f}_{a1} + \vec{V}_{dr}\cdot[\vec{\nabla}\ln F_a + 2/v_{ta}^2(I\hat{n}_{\parallel}\cdot[\vec{V} + \vec{u}_E^{(0)}]/B)\partial(R^{-1}\vec{u}_E^{(0)}\cdot\hat{n}_{\phi})$$

$$/\partial\psi\,\hat{e}_{\psi}]F_a - (e_a\vec{V}_{\parallel}\cdot\vec{\nabla}\Phi_1)F_a/T_a = \sum_b(C_{ab}(\hat{f}_{a1},\hat{f}_{b1}) + S_{aB}(F_a,f_B))$$

(2.2-50)

where in order to facilitate the computations, the phase space basis $\{\vec{r},H,\mu,t\}$ has been employed and the restriction $(B_{\chi}/B_{\phi})^2 << 1$ (and therefore $R^2 \sim (I/B)^2$), which is applicable to most present generation tokamaks, has been applied. Furthermore all terms greater than first order in δ have been neglected and the radial drift velocity in the frame moving with the plasma has been defined such that

$$\vec{V}_{dr}\cdot\hat{e}_{\psi} = 2\pi\vec{V}_{\parallel}/\gamma'\cdot\vec{\nabla}[I\hat{n}_{\parallel}\cdot(\vec{V} + \vec{u}_E^{(0)})/\Omega_a].$$

(2.2-51)

The solution to eq.(2.2-50) can be obtained by the method of successive approximations whereby the function $\hat{f}_{a1}$ is expanded in terms of the collisionality parameter. This technique will be used in the next chapter to determine the $O(\delta^1)$ particle distribution function in all three collision frequency regimes.

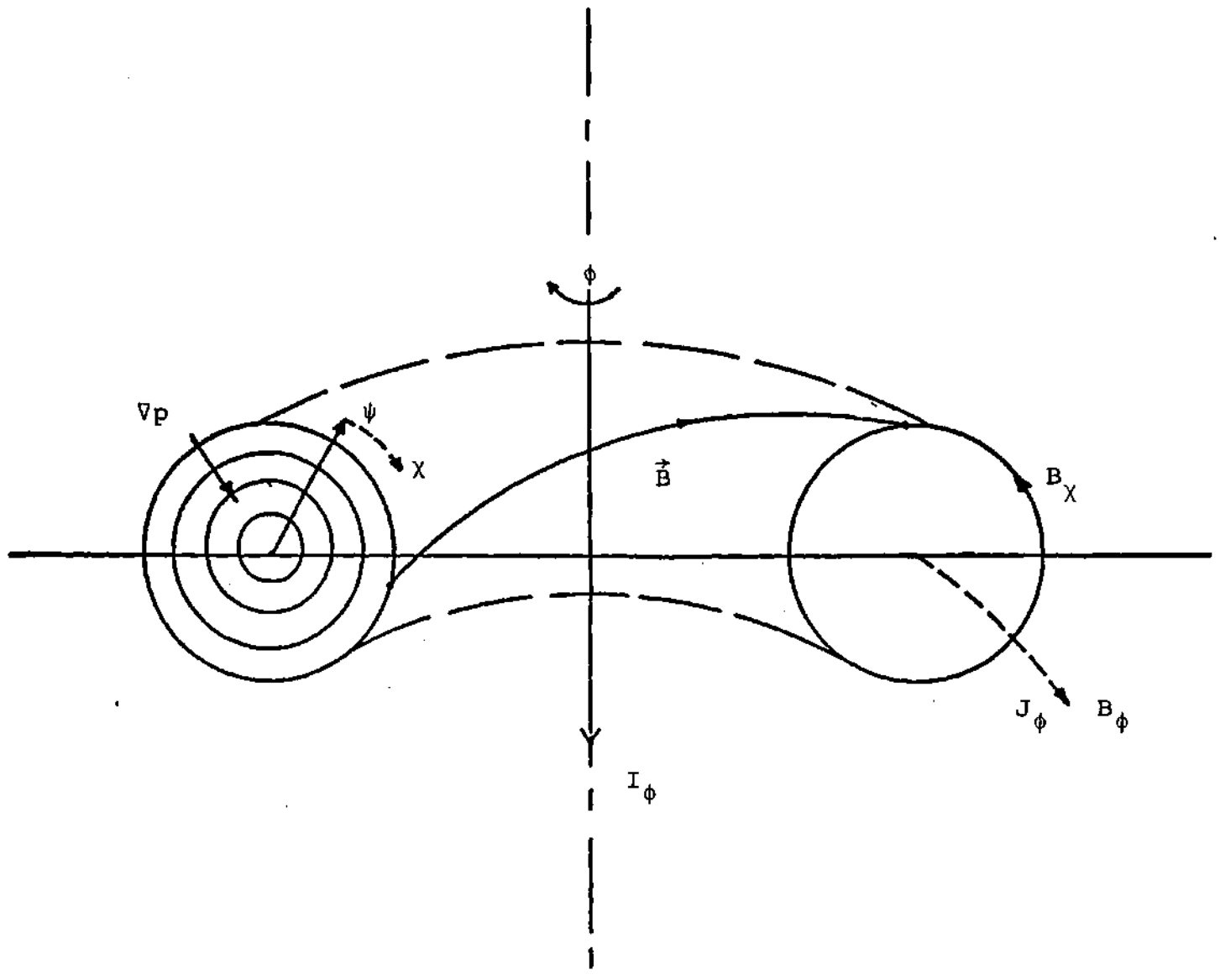

FIGURE (2.2-1)

GENERALIZED AXISYMMETRIC COORDINATE SYSTEM

TRAPPED ION ORBIT

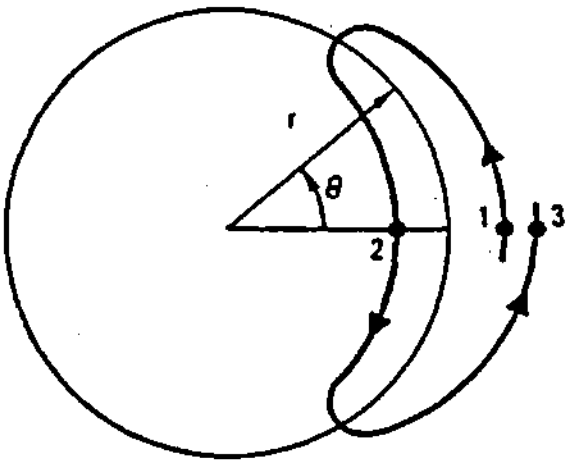

UNTRAPPED ION ORBIT

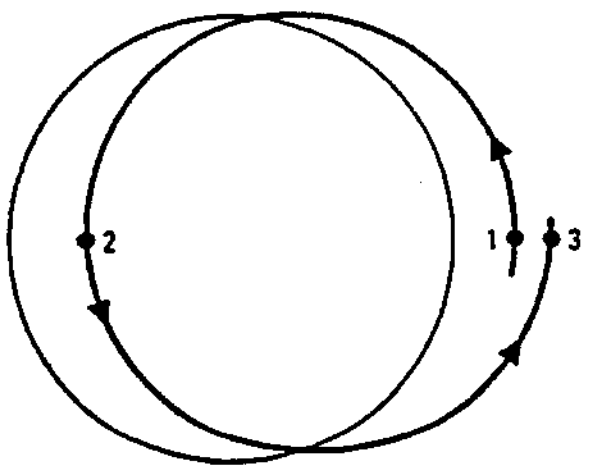

FIGURE (2.2-2)

THE EFFECT OF A TIME VARYING RADIAL ELECTRIC FIELD ON THE GUIDING CENTER MOTION OF AN ION IN A TOKAMAK

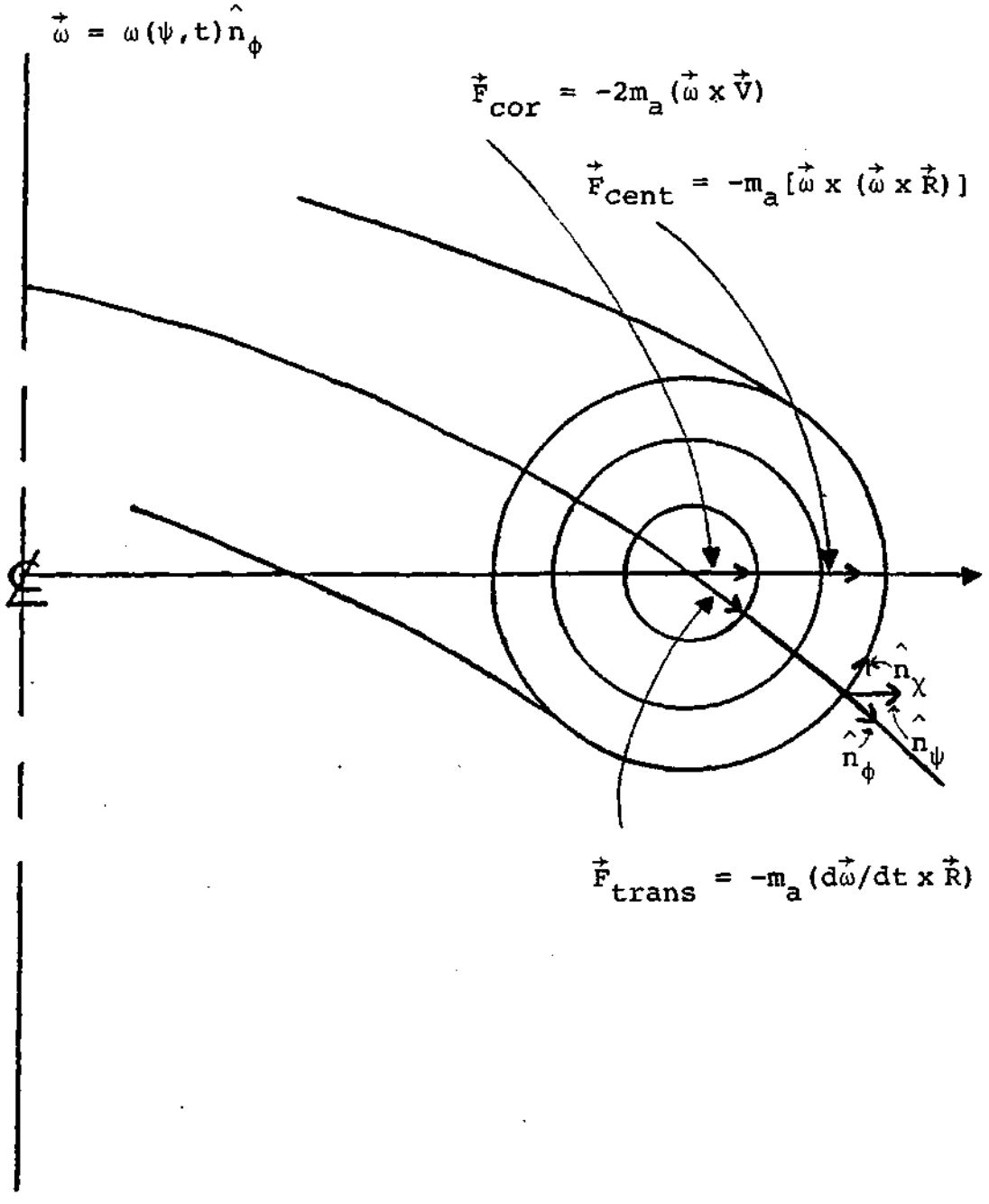

FIGURE (2.2-3)

THE FICTITOUS FORCES

$$\vec{V}_{gc} = D_{\zeta}[\vec{V} - d(\hat{n}_{\parallel} \times \vec{V}/\Omega_a)/dt]$$

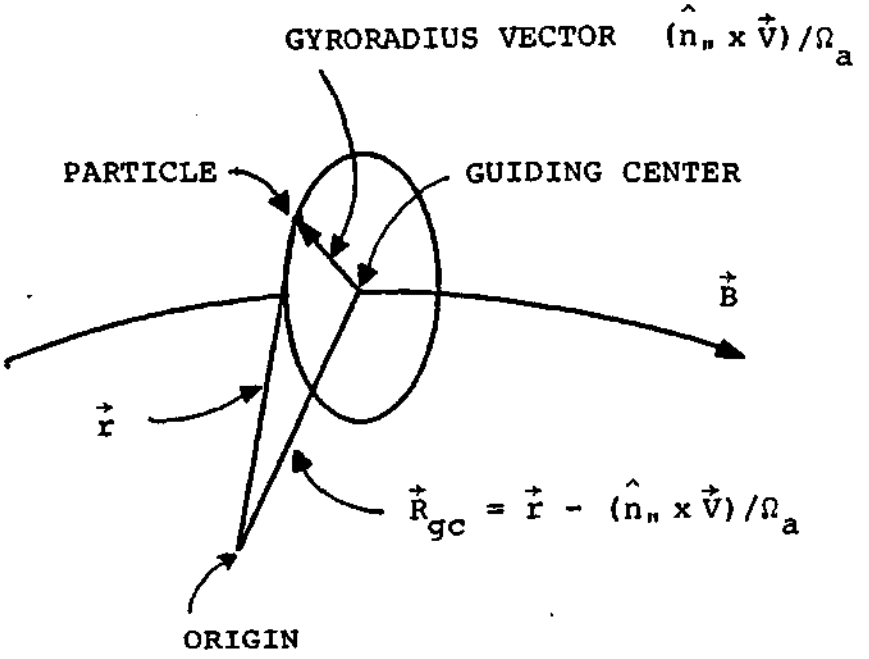

FIGURE (2.2-4)

THE GUIDING CENTER COORDINATES

2.3 THE LINEARIZED FOKKER-PLANCK COLLISION OPERATOR

The Fokker-Planck collision operator describes the manner in which a distribution function of charged particles changes as a result of collisions with its own specie or other charged particle species. In this section the fundamental structure and properties of the Fokker-Planck collision operator will be reviewed and a collision operator, which accounts for both the direct and indirect effects of neutral beam injection, will be developed.

For the relevant case of coulomb collision, the dynamic behavior of a distribution of charged particles can be viewed as a Markovian process [87] since the time interval over which the total deflection process occurs (i.e. the time of passage of a particle across a Debye sphere) is sufficiently short so that the change in the particle's velocity is small, but is long compared to the continuance of the correlation of fluctuations in the microfield. In this context it can be shown that the Fokker-Planck collision operator can be expressed in the following general form [88,89]:

$$C_{ab}(f_a,f_b) = -\Gamma_{ab}[\vec{\nabla}_v\cdot(f_a\vec{\nabla}_v h_{ab}) - 1/2\vec{\nabla}_v\vec{\nabla}_v:(f_a\vec{\nabla}_v\vec{\nabla}_v g_{ab})] \tag{2.3-1}$$

where

$$\Gamma_{ab} = (e_a e_b)^2 \ln / (4\pi\varepsilon_0^2 m_a^2) \tag{2.3-2}$$

and h_{ab} and g_{ab} are the first and second Rosenbluth potential functions defined such that

$$h_{ab} = m_a/m_{ab} (\int_{\vec{v}'} f_b / (|\vec{v} - \vec{v}'|) d^3v \tag{2.3-3}$$

and

$$g_{ab} = \int_{\vec{v}'} |\vec{v} - \vec{v}'| f_b d^3v \tag{2.3-4}$$

with the quantity $m_{ab} = m_a m_b/(m_a + m_b)$ being the reduced mass. Since the Fokker-Planck collision operator is actually a phase space operator, then eq. (2.3-1) can be cast into conservation form with the result [89]:

$$C_{ab}(f_a, f_b) + \vec{\nabla}_v \cdot (\vec{K}_a f_a) = 0 \tag{2.3-5}$$

where

$$\vec{K}_a = \vec{F}_{ab}/(m_a + m_b) - \overleftrightarrow{D}_{ab} \cdot \vec{\nabla}_v/2 \tag{2.3-6}$$

is a phase space vector which represents the continuous flow of phase points. This phase space vector is comprised of a convective friction term and a diffusion term defined such

that

$$\vec{F}_{ab} = m_a(\Gamma_{ab}\vec{\nabla}_v h_{ab}) \tag{2.3-7}$$

and

$$\overleftrightarrow{D}_{ab} = \Gamma_{ab}\vec{\nabla}_v\vec{\nabla}_v g_{ab} \tag{2.3-8}$$

respectively.

To understand the physical significance of these components, consider the behavior of a stream of test particles with velocity $\vec{v}$ injected into a plasma. As the test particles undergo collisional momentum exchange interactions with the field particles, the average change in the velocity vector of the test particles is characterized by the dynamical friction term whereas the spreading out of the cloud of test particles is represented by the diffusion term $\overleftrightarrow{D}_{ab}$.

For most cases of interest in neoclassical transport theory, the (a) species distribution function can be represented by a perturbed Maxwellian, i.e. $f_a = f_{a0} + f_{a1}$ where f_{a0} is a local Maxwellian and f_{a1} represents some perturbation from equilibrium. As a result, in a state of quasi-thermodynamic equilibrium the linearized collision operator can be expressed as the sum of two components, namely the test particle collision operator and the field

response collision operator

$$C_{ab}(f_a,f_b) = C_{ab}(f_{a1},f_{b0}) + C_{ab}(f_{a0},f_{b1}). \tag{2.3-9}$$

To obtain an explicit expression for the test particle component of the collision operator, the first and second Rosenbluth potential functions are evaluated in the presence of a Maxwellian field distribution with the result (See Appendix E)

$$C_{ab}(f_{a1},f_{b0}) = \eta^{+}_{ab}Lf_{a1} + \vec{v}/v^3\cdot\vec{\nabla}_v(I_{ab}f_{a1}) \tag{2.3-10}$$

where

$$L = (\vec{v}\times\vec{\nabla}_v)^2/2 \tag{2.3-11}$$

is the pitch angle operator and

$$I_{ab} = v^3 m_{ab}/m_b(\eta^{s}_{ab} + m_b\eta^{''}_{ab}\vec{v}\cdot\vec{\nabla}_v/(2m_{ab})) \tag{2.3-12}$$

with η^{s}_{ab}, η^{+}_{ab} and $\eta^{''}_{ab}$ being the slowing down, pitch angle deflection and parallel diffusion rate characteristic frequencies, the definition of which are given in Appendix E.

Now it is of interest to note that since the Legendre poloynomials are eigenfunctions of the pitch angle operator,

then this operator satisfies the eigenvalue equation

$$LP_\ell(\cos\theta) = -\ell(\ell + 1)P_\ell(\cos\theta)/2 \ . \tag{2.3-13}$$

Furthermore the particle distribution function is symmetric about the magnetic field lines, consequently the test particle component of the collision operator can be separated in accordance to its respective harmonic components. In particular since the majority of this thesis deals with the development of the friction-flow and viscous stress constitutive relationships for a strongly rotating plasma, attention will be focused primarily on the $\ell = 1$ and $\ell = 2$ harmonic components of the collision operator. To decompose the test particle component of the collision into its harmonic constituents, the particle distribution function is expanded in a cartesian-tensor series of the form [90,91,92]:

$$f_{a1} = \sum_\ell (\overleftrightarrow{A}_a^{(\ell)}(v) \cdot_\ell (\vec{v}\vec{v}\vec{v}\cdots\vec{v}_\ell)/v^\ell) f_{a0} = \Phi_a^{(\ell)}(v) f_{a0} \tag{2.3-14}$$

where

$$\overleftrightarrow{A}_a^{(\ell)}(v) = (2\ell + 1)!/(4\pi)\int_{\hat{\Omega}} (\vec{v}\vec{v}\vec{v}\cdots\vec{v}_\ell)/v^\ell \Phi_a^{(\ell)} d\hat{\Omega} \tag{2.3-15}$$

with $d\hat{\Omega}$ being a solid angle differential element. Using the $\ell = 1$ component of eq.(2.3-14) in eq.(2.3-10) yields

$$C_{ab}^{(1)}(f_{a1}^{(1)},f_{b0}) = -\eta_{ab}^{s}f_{a1}^{(1)} + \vec{v}/v^4\cdot\vec{\nabla}_v[\eta_{ab}^{''}v^4([(v/v_{ta})^2 - 1/2] + \vec{v}\cdot\vec{\nabla}_v/2)f_{a1}^{(1)}] \tag{2.3-16}$$

where the eigenvalue relationship $Lf_{a1}^{(1)} = -f_{a1}^{(1)}$ has been used in obtaining eq.(2.3-16). To physically identify the respective terms appearing in the above expression, the $m_a v^j\vec{v}/2^j$ moments of the collisional and heat friction components of eq.(2.3-16) can be selected to give

$$\vec{R}_{(a1,b0)_1} = m_a\int_{\vec{v}}\vec{v}C_{ab}^{(1)}(f_{a1}^{(1)},f_{b0})d^3v = -m_a\int_{\vec{v}}\eta_{ab}^{s}\vec{v}f_{a1}^{(1)}d^3v \tag{2.3-17}$$

and

$$\vec{R}_{(a1,b0)_3} = m_a/2[\int_{\vec{v}}\vec{v}\vec{v}/v^2\cdot\vec{\nabla}_v[\eta_{ab}^{''}v^4([(v/v_{ta})^2 - 1/2] + (\vec{v}/2)\cdot\vec{\nabla}_v)f_{a1}^{(1)}d^3v] = m_a/2[\int_{\vec{v}}\eta_{ab}^{K}v^2\vec{v}f_{a1}^{(1)}d^3v] \tag{2.3-18}$$

where

$$\eta_{ab}^{K} = [7\eta_{ab}^{''} + \vec{v}\cdot\vec{\nabla}_v\eta_{ab}^{''} - 2(v/v_{ta})^2\eta_{ab}^{''}] = 2(3\eta_{ab}^{''}/2 + \eta_{ab}^{\perp} - \eta_{ab}^{s}) \tag{2.3-19}$$

is a characteristic frequency for heat flux generation due

to the test particle collisional interaction with the field particles. The first term in eq. (2.3-16) gives rise to the collisional momentum exchange moment whereas the second term in this equation is responsible for collisional heat flux generation (heat friction) of the test particle component.

Likewise, using the $\ell = 2$ component of eq.(2.3-14) in eq.(2.3-10) yields

$$C_{ab}^{(2)}(f_{a1}^{(2)}, f_{b0}) = -\eta_{ab}^{T} f_{a1}^{(2)} \tag{2.3-20}$$

where here $\eta_{ab}^{T} = 2\eta_{ab}^{s} + (\eta_{ab}^{\perp} - \eta_{ab}^{\parallel})$ is the total characteristic frequency for the relaxation of stress anisotropy of species (a). Note that in obtaining eq. (2.3-20) the eigenvalue relationship $Lf_{a1}^{(2)} = -3f_{a1}^{(2)}$ has been used and all velocity space derivatives in the test particle component of the collision operator (except the pitch angle component) have been omitted since these derivations do not contribute to the $\vec{v}\vec{v}$ moment of the collision operator. Physically the Krook like term [93] represents the test particle collisional stress response. Selecting the $m_a(\vec{v}\vec{v} - v^2\overleftrightarrow{I}/3)$ moment of eq.(2.3-20) yields

$$\overleftrightarrow{R}(a1,b0)_2 = m_a \int_{\vec{v}} (\vec{v}\vec{v} - v^2\overleftrightarrow{I}/3) C_{ab}^{(2)}(f_{a1}^{(2)}, f_{b0}) d^3v =$$

$$-m_a \int_{\vec{v}} (\vec{v}\vec{v} - v^2\overleftrightarrow{I}/3) \eta_{ab}^{T} f_{a1}^{(2)} d^3v \tag{2.3-21}$$

where the tensor $\overleftrightarrow{R}_{(a1,b0)_2}$ represents the test particle collisional stress moment.

The field response component of the collision operator can be evaluated for a Maxwellian test particle distribution function to give

$$C_{ab}(f_{a0},f_{b1}) = \Gamma_{ab}[4\pi m_a f_{b1}/m_b - 2m_{ab}/(m_a v_{ta})^2(h_{ab} + [1 - m_a/m_b]\vec{v}\cdot\vec{\nabla}_v h_{ab}) + 2/v_{ta}^4 \vec{v}\vec{v}:\vec{\nabla}_v\vec{\nabla}_v g_{ab}]f_{a0}\,. \tag{2.3-22}$$

To express this component of the collision operator in terms of its harmonic components, the intergrand of the Rosenbluth potential functions are expanded in a spherical harmonic series, which in conjunction with eq.(2.3-14) yields (See Appendix F):

$$h_{ab} = m_a/(m_{ab}v)\sum_{\ell}(\overleftrightarrow{\alpha}^{(\ell)}_{b(\ell)} + \overleftrightarrow{\beta}^{(\ell)}_{b-(\ell+1)})\,\dot{}_{\ell}(\vec{v}\vec{v}\vec{v}\cdots\vec{v}_{\ell})/([2\ell + 1]v^{\ell}) \tag{2.3-23}$$

and

$$g_{ab} = v\sum_{\ell}[(\overleftrightarrow{\alpha}^{(\ell)}_{b(\ell+2)} + \overleftrightarrow{\beta}^{(\ell)}_{b-(\ell+1)})/(2\ell + 3) - (\overleftrightarrow{\alpha}^{(\ell)}_{b(\ell)} + \overleftrightarrow{\beta}^{(\ell)}_{b(1-\ell)})/(2\ell - 1)]\,\dot{}_{\ell}(\vec{v}\vec{v}\vec{v}\cdots\vec{v}_{\ell})/([2\ell + 1]v^{\ell}) \tag{2.3-24}$$

where the tensor functions $\overleftrightarrow{\alpha}^{(i)}_{b(j)}$ and $\overleftrightarrow{\beta}^{(i)}_{b(j)}$ are defined

such that [91,92]:

$$\overleftrightarrow{\alpha}^{(i)}_{b(j)} = 4\pi/v^j \int_0^v \overleftrightarrow{A}^{(i)}_{b1}\, f_{b0} v^{(j+2)} dv \tag{2.3-25}$$

and

$$\overleftrightarrow{\beta}^{(i)}_{b(j)} = 4\pi/v^j \int_v^\infty \overleftrightarrow{A}^{(i)}_{b1}\, f_{b0} v^{(j+2)} dv \tag{2.3-26}$$

respectively. Note that in obtaining eqs.(2.3-23) and (2.3-24) the spherical harmonic equivalance relationship [94]

$$\overleftrightarrow{A}^{(\ell)}_{b1} \cdot_\ell (\vec{v}\vec{v}\vec{v}\cdots\vec{v}_\ell)/v^\ell = \sum_{ms}\sum (A^{(\ell)}_{b1ms}(v) Y^{(\ell)}_{ms}(\theta,\phi) \tag{2.3-27}$$

has been employed. Using eqs (2.3-23) and (2.3-24) in eq. (2.3-22) yields [91,92]:

$$C_{ab}(f_{a0}, f_{b1}) = \sum_\ell (C^{(\ell)}_{ab} \cdot_\ell (\vec{v}\vec{v}\vec{v}\cdots\vec{v}_\ell)/v^\ell) f_{a0} \tag{2.3-28}$$

where the $\ell = 1,2$ components of $C_{ab}(f_{a0}, f_{b1})$ are defined such that

$$C^{(1)}_{ab}(f_{a0}, f^{(1)}_{b1}) = 4\pi m_a \Gamma_{ab} \vec{A}^{(1)}_{b1} \cdot \vec{v} f_{b0}/(m_b v) + 2\Gamma_{ab}/v^2_{ta}([(1 - 2m_a/m_b)\vec{\alpha}^{(1)}_{b(1)} \cdot \vec{v}/(3v) + 2\vec{v}\cdot\vec{\alpha}^{(1)}_{b(-2)}/(5vv^2_{ta})]) + [(m_a/m_b - 2)\vec{\beta}^{(1)}_{b(-2)} \cdot \vec{v}/(3v^2) + 2\vec{v}\cdot\vec{\beta}^{(1)}_{b(-2)}/(5v^2_{ta})]) \tag{2.3-29}$$

and

$$C_{ab}^{(2)}(f_{a0},f_{b1}^{(2)}) = 4\pi m_a\Gamma_{ab}\overleftrightarrow{A}_{b1}^{(2)}:\vec{v}\vec{v}f_{b0}/(m_b v^2) + 2\Gamma_{ab}/(5v_{ta}^2)([2 - 3m_a/m_b]\vec{v}\vec{v}:\overleftrightarrow{\alpha}_{b(2)}^{(2)}/v^3 - 2\vec{v}\vec{v}:\overleftrightarrow{\alpha}_{b(2)}^{(2)}/(3vv_{ta}^2) + 12\vec{v}\vec{v}:\overleftrightarrow{\alpha}_{b(4)}^{(2)}/(7v v_{ta}^2) + [2m_a/m_b - 3]\vec{v}\vec{v}:\overleftrightarrow{\beta}_{b(-3)}^{(2)}/v^3 - 2\vec{v}\vec{v}:\overleftrightarrow{\beta}_{b(-1)}^{(2)}/(3v^3v_{ta}^2) + 12\vec{v}\vec{v}:\overleftrightarrow{\beta}_{b(-3)}^{(2)}/(7vv_{ta}^2)) . \tag{2.3-30}$$

Finally, combining eqs.(2.3-16) and (2.3-20) with eqs.(2.3-29) and (2.3-30) yields the following expression for the $\ell = 1,2$ harmonics of the collision operator [91,92]:

$$C_{ab}^{(1)}(f_{a1}^{(1)},f_{b1}^{(1)}) = -\eta_{ab}^{s}f_{a1}^{(1)} + \vec{v}/v^4\cdot\vec{\nabla}_v[\eta_{ab}^{''}v^4([(v/v_{ta})^2 - 1/2] + \vec{v}/(2v^2)\cdot\vec{\nabla}_v)f_{a1}^{(1)}] + [4\pi m_a\Gamma_{ab}\vec{A}_{b1}^{(1)}\cdot\vec{v}f_{b0}/(m_b v) + 2\Gamma_{ab}/v_{ta}^2([(1 - 2m_a/m_b)\overleftrightarrow{\alpha}_{b(1)}^{(1)}\cdot\vec{v}/(3v) + 2\vec{v}\cdot\overleftrightarrow{\alpha}_{b(-2)}^{(1)}/(5vv_{ta}^2)] + [(m_a/m_b - 2)\overleftrightarrow{\beta}_{b(-2)}^{(1)}\cdot\vec{v}/(3v^2) + 2\vec{v}\cdot\overleftrightarrow{\beta}_{b(-2)}^{(1)}/(5v_{ta}^2)])) \tag{2.3-31}$$

and

$$C_{ab}^{(2)}(f_{a1}^{(2)},f_{b1}^{(2)}) = -\eta_{ab}f_{a1}^{(2)} + 4\pi m_a\Gamma_{ab}\overleftrightarrow{A}_{b1}^{(2)}:\vec{v}\vec{v}f_{b0}/(m_b v^2) + 2\Gamma_{ab}/(5v_{ta}^2)([2 - 3m_a/m_b]\vec{v}\vec{v}:\overleftrightarrow{\alpha}_{b(2)}^{(2)}/v^3 - 2\vec{v}\vec{v}:\overleftrightarrow{\alpha}_{b(2)}^{(2)}/(3vv_{ta}^2) +$$

$$12\vec{v}\vec{v}:\overleftrightarrow{\alpha}^{(2)}_{b(4)}/(7vv^2_{ta}) + [2m_a/m_b - 3]\vec{v}\vec{v}:\overleftrightarrow{\beta}^{(2)}_{b(-3)}/v^3 - 2\vec{v}\vec{v}:\overleftrightarrow{\beta}^{(2)}_{b(-1)}$$

$$/(3v^3v^2_{ta}) + 12\vec{v}\vec{v}:\overleftrightarrow{\beta}^{(2)}_{b(-3)}/(7vv^2_{ta})). \tag{2.3-32}$$

Because of the integro-differential nature of the collision operator the actual solution to the kinetic equations still remains quite complex. To simplify this operator, a method developed by Sigmar et. al. [95] and Hirshman [96] will be used in which the pitch angle derivatives of the test particle component of the collision operator are kept rigorously but the integral and differential velocity space operators, which comprise the remaining part of the test particle component and the field response component of the collision operator, are incorporated into global terms which are determined from the conservation properties of the collision operator. This approach has the advantage that the pitch angle scattering process, which is the dominant neoclassical effect, is kept rigorously whereas the smaller energy diffusion aspect of the collision operator is retained in a global sense. In a beam injected plasma where the field response component of the collision operator is enhanced by beam particle collisions with the background plasma species, this method provides a mechanism whereby the beam induced collisional response can be implicitly accounted for. In addition, this

technique allows the collision operator to be put in a form whereby the algebraic nature of the operator can be exploited thereby rendering the kinetic equation amenable to analytic solution. The method is motivated by the fact that the pitch angle component of the collision operation has Legendre polynomials as eigenfunctions for an axisymmetric system, whereas the velocity diffusion component does not.

Since the null space of the collision operator consists of the Maxwellian eigenbasis [63]:

$$\{n_{\sigma 1}/n_{\sigma 0}, 2\vec{v}\cdot\vec{v}_{\sigma 1}/v_{t\sigma}^2, T_{\sigma 1}/T_{\sigma 0}(v/v_{t\sigma})^2\} \tag{2.3-33}$$

then the eigenfunctions of the collision operator must be some linear combination of the elements of this basis. To construct a set of trial eigenfunctions, recall that since the first order perturbation to the Maxwellian distribution can be accurately expressed in terms of generalized Laguerre polynomials [63,87,88] for a slowly rotating plasma, then an appropiate set of trial eigenfunctions characterizing a strongly rotating plasma should be of the general form [96]:

$$f_{\sigma 1}^{(1)} = \vec{A}_{\sigma 1}^{(1)}\cdot\vec{v}/v = 2\vec{v}/v_{t\sigma}^2\cdot\sum_j^1(\vec{U}_{\sigma j}^{(1)}(v)\bar{L}_j^{3/2}(v/v_{t\sigma})^2)f_{\sigma 0} \tag{2.3-34}$$

and

$$f_{\sigma 1}^{(2)} = \overleftrightarrow{A}_{\sigma 1}^{(2)}:\vec{v}\vec{v}/v^2 = \vec{v}\vec{v}:\overleftrightarrow{P}_{\sigma}^{(2)}(v)f_{\sigma 0}/v_{t\sigma}^4 \tag{2.3-35}$$

where $\bar{L}_j^K(v/v_{t\sigma})^2 = (\delta_{j,0} - L_j^K(v/v_{t\sigma})^2\delta_{j,1})$ with $L_j^K(v/v_{t\sigma})^2$ being the jth Laguerre polynomial of order K and $\sigma = a,b$. Using these trial functions in eq.(2.3-31) and (2.3-32) and carrying out the required mathematical manipulations yields [96]

$$C_{ab}^{(1)}(f_{a1}^{(1)},f_{b1}^{(1)}) = -\eta_{ab}^{s}f_{a1}^{(1)} + 2\vec{v}\cdot\vec{S}_{ab}^{(1)}(v)f_{a0}/v_{ta}^2 \tag{2.3-36}$$

and

$$C_{ab}^{(2)}(f_{a1}^{(2)},f_{b1}^{(2)}) = -\eta_{ab}^{T}f_{a1}^{(2)} + 5\vec{v}\vec{v}:\overleftrightarrow{S}_{ab}^{(2)}(v)f_{a0}/(2v_{ta}^4) \tag{2.3-37}$$

where the global energy diffusion functions are defined so that

$$\vec{S}_{ab}^{(1)}(v) = \eta_{ab}^{s}\vec{K}_{ab}^{(1)} + (\eta_{ab}^{Q}\vec{L}_{ab}^{(1)} + \eta_{ab}^{K}\vec{M}_{ab}^{(1)})(v/v_{ta})^2 \tag{2.3-38}$$

and

$$\overleftrightarrow{S}_{ab}^{(2)}(v) = 2\eta_{ab}^{p}\overleftrightarrow{N}_{ab}^{(2)} \tag{2.3-39}$$

with the global velocity coefficients $\vec{K}_{ab}^{(1)},\vec{L}_{ab}^{(1)},\vec{M}_{ab}^{(1)}$ and $\overleftrightarrow{N}_a^{(2)}$ being linear combinations of the functional expansion coefficients $\vec{U}_{\sigma j}^{(1)}$ and $\overleftrightarrow{P}_{\sigma j}^{(2)}$ for $j = 0,1$, and the field response heat flux and anisotropic stress relaxation rates η_{ab}^{Q} and η_{ab}^{p} defined such that [96]:

$$\eta^{Q}_{ab} = 3[(\eta^{s}_{ab} - [\eta^{\perp}_{ab} + \eta''_{ab}]) - m_a/m_b(\eta^{\perp}_{ab} + \eta''_{ab})] \tag{2.3-40}$$

and

$$\eta^{p}_{ab} = 2[\eta^{s}_{ab} - (\eta^{\perp}_{ab} - \eta''_{ab})(1 + 3[v_{tb}/v_{ta}]^2)]. \tag{2.3-41}$$

The velocity space coefficients $\vec{K}^{(1)}_{ab}, \vec{L}^{(1)}_{ab}, \vec{M}^{(1)}_{ab}$ and $\overleftrightarrow{N}^{(2)}_{ab}$ can be related to the physical properties of the collision operator by selecting the various velocity moments of eqs.(2.3-36) and (2.3-37). In particular selecting the $m_a\vec{v}$ moment of eq.(2.3-36) and using eq. (2.3-17) in conjunction with the conservation of momentum yields [96]

$$\vec{K}^{(1)}_{ab} = c^{s}_{ab}\vec{R}_{(a0,b1)_1} \tag{2.3-42}$$

where

$$c^{s}_{ab} = \{m_a n_a \eta^{s}_{ab}\} \tag{2.3-43}$$

and

$$\vec{R}_{(a0,b1)_1} = -\vec{R}_{(b1,a0)_1} = -m_b\int_{\vec{v}}\vec{v}C^{(1)}_{ba}(f^{(1)}_{b1}, f_{a0})d^3v = m_b\int_{\vec{v}}\eta^{s}_{ba}\vec{v}f^{(1)}_{b1}d^3v \tag{2.3-44}$$

with the integral operator $\{A(v)\}$ defined such that [8]

$$\{A(v)\} = 8/(3\sqrt{\pi})\int_0^\infty x_a^4 A(x_a v_{ta}) e^{-x_a^2} dx_a \quad . \tag{2.3-45}$$

Furthermore, $\vec{L}_{ab}^{(1)}$ and $\overleftrightarrow{N}_{ab}^{(2)}$ can be related to the field particle heat flux generation and anisotropic stress. The physical expressions for these quantities can be determined by selecting the $m_a v^2 \vec{v}/2$ and $m_a(\vec{v}\vec{v} - v^2 \overleftrightarrow{I}/3)$ moments of the heat friction component of eqs.(2.3-36) and (2.3-37) respectively, and setting the resulting expression equal to the heat friction component of eq.(2.3-31) and the $m_a(\vec{v}\vec{v} - v^2 \overleftrightarrow{I}/3)$ moment of eq.(2.3-32) respectively to give [96]

$$\vec{L}_{ab}^{(1)} = c_{ab}^{Q} \vec{R}_{(a0,b1)_3} \tag{2.3-46}$$

and

$$\overleftrightarrow{N}_{ab}^{(2)} = c_{ab}^{p} \overleftrightarrow{R}_{(a0,b1)_2} \tag{2.3-47}$$

where

$$c_{ab}^{Q} = \{T_a \eta_{ab}^{Q} x_a^4\} \tag{2.3-48}$$

$$\vec{R}_{(a0,b1)_3} = m_a/2\int_{\vec{v}} v^2 \vec{v} C_{ab}^{(1)}(f_{a0}, f_{b1}) d^3v = m_b/2\int_{\vec{v}} \eta_{ba}^{Q} v^2 \vec{v} f_{b1}^{(1)} d^3v \tag{2.3-49}$$

$$c_{ab}^{p} = \{p_a \eta_{ab}^{p} x_a^2\} \tag{2.3-50}$$

and

$$\overleftrightarrow{R}_{(a0,b1)_2} = m_a \int_{\vec{v}} (\vec{v}\vec{v} - v^2 \overleftrightarrow{I}/3) C^{(2)}_{ab} (f_{a0}, f^{(2)}_{b1}) d^3v = m_b \int_{\vec{v}} \eta^P_{ba} (\vec{v}\vec{v} - v^2 \overleftrightarrow{I}/3) f^{(2)}_{b1} d^3v \quad . \tag{2.3-51}$$

Likewise from eq.(2.3-18)

$$\vec{M}^{(1)}_{ab} = c^K_{ab} \vec{R}_{(a1,b0)_3} \tag{2.3-52}$$

where

$$c^K_{ab} = \{m_a n_a \eta^K_{ab} x^4_a\}. \tag{2.3-53}$$

Consequently in view of eqs.(2.3-36) through (2.3-53)

$$\vec{S}^{(1)}_{ab}(v) = \eta^S_{ab} c^S_{ab} \vec{R}_{(a0,b1)_1} + (\eta^Q_{ab} c^Q_{ab} \vec{R}_{(a0,b1)_3} + \eta^K_{ab} c^K_{ab} \vec{R}_{(a1,b0)_3}) (v/v_{ta})^2 \tag{2.3-54}$$

and

$$\overleftrightarrow{S}^{(2)}_{ab}(v) = 2\eta^P_{ab} c^P_{ab} \overleftrightarrow{R}_{(a0,b1)_2} \quad . \tag{2.3-55}$$

In essence, eqs.(2.3-41) through (2.3-53) define the restoring coefficients necessary to account for the back-

ground plasma field collisional response [95,96] to the (a) species. This technique differs from a rigorous expansion of the particle distribution function in Laguerre polynomials [97,98] in that the restoring coefficients are determined from moments of the collision operator and the physical conservation properties of the Fokker-Planck operator rather than selecting moments of the distribution function. This renormalization of the infinite series has the approximate effect of taking account of higher order polynomials neglected in the trial functions. This is important in a beam injected plasma where the collisional field response to the (a) species is influenced by fast beam ions as well as the background particles. Finally it can be shown that [96] the collision operators given by eqs. (2.3-36) and (2.3-37) preserve the fundamental properties possessed by the unapproximated Fokker-Planck operator, namely it obeys the conservation properties of particle continuity, momentum and energy, possess an H-theorem, is self-adjoint and is Galilean invariant [96]. This last property enables the approximate collision operator to be referenced to a moving frame, a necessary condition when dealing with a strongly rotating plasma.

In the last part of this section a collision operator is developed which accounts for the beam ion collisions with the background plasma . Unfortunately, the approximate collision operators given by eqs.(2.3-36) and (2.3-37) are

only applicable to small angle collisional interactions in which the distribution function is only slightly displaced from equilibrium whereas in the case of an energetic beam ion slowing down in a plasma, the beam distribution function is highly anisotropic and therefore this approximation cannot be used. As a result the lowest order collision operator must be determined directly from eq.(2.3-22). Combining eqs.(2.3-23) and (2.3-24) with (2.3-22) and carrying out the indicated differentiations yields

$$C_{aB}(f_{a0},f_B) = \sum_{\ell} \Gamma_{aB} \overleftrightarrow{I}_{aB}^{(\ell)}(v) \cdot \vec{v}_{\ell}^{(\ell)} f_{a0}/v^{(\ell)} \tag{2.3-56}$$

where

$$\begin{aligned}\overleftrightarrow{I}_{aB}^{(\ell)}(v) = {} & 4\pi m_a \overleftrightarrow{F}_{B1}^{(\ell)}/m_B + 2/v_{ta}^2[(2v^2/v_{ta}^2 - 1)([\ell + 1][\ell + 2] \\ & (\overleftrightarrow{\alpha}_{B(\ell+2)}^{(\ell)} + \overleftrightarrow{\beta}_{B-(\ell+1)}^{(\ell)})/(2v[2\ell + 1][2\ell + 3]) - \ell[\ell - 1](\overleftrightarrow{\alpha}_{B(\ell)}^{(\ell)} \\ & + \overleftrightarrow{\beta}_{B(1-\ell)}^{(\ell)})/(2v[2\ell + 1][2\ell - 1]) + [\ell + 1]([\ell + 2]\overleftrightarrow{\alpha}_{B(\ell+2)}^{(\ell)} \\ & - [3\ell + 4]\overleftrightarrow{\beta}_{B-(\ell+1)}^{(\ell)})/(2v[2\ell + 1][2\ell + 3]) - \ell([1 - 3\ell]\overleftrightarrow{\alpha}_{B(\ell)}^{(\ell)} \\ & + [\ell - 1]\overleftrightarrow{\beta}_{B(1-\ell)}^{(\ell)})/(2v[2\ell + 1][2\ell - 1]) + m_a([\ell + 1]\overleftrightarrow{\alpha}_{B(\ell)}^{(\ell)} - \\ & \ell\overleftrightarrow{\beta}_{B-(\ell+1)}^{(\ell)})/(2m_B v[2\ell + 1])] \ .\end{aligned} \tag{2.3-57}$$

Now for most present generation tokamaks the beam ions satisfy the criterion $v_{ta} << v_{B0} << v_{te}$. As a result, the beam ions initially slow down primarily from collisional

interactions with the electrons. Since $v_{te}/v_{B0} >> 1$ then

$$\int_0^v d^3v \rightarrow \int_{v_c}^{v_{B0}} d^3v \quad \text{and} \quad \int_v^\infty d^3v \rightarrow 0 \tag{2.3-58}$$

where v_{B0} is the initial beam velocity and v_c is the critical velocity. As the beam ions velocity decreases then the dominant collisional interaction is with the plasma ions

$$\int_0^v d^3v \rightarrow 0 \quad \text{and} \quad \int_v^\infty d^3v \rightarrow \int_{v_c}^{v_{B0}} d^3v \ . \tag{2.3-59}$$

Here it has been assumed for most present generation tokamaks where $n_B/n_a << 1$, it is only those energetic beam ions whose thermal velocity is considerably larger than the background ions that drive the distortions in the ion particle distribution function.

Finally combining eqs.(2.3-58) and (2.3-59) with eq.(2.3-57) yields

$$S_{aB}(f_{a0},f_B) = \sum_\ell S_{aB}^{(\ell)}(f_{a0},f_B^{(\ell)}) = \sum_\ell \overleftrightarrow{C}_{aB}^{(\ell)} \cdot_\ell (\vec{v}\vec{v}\vec{v}\cdots\vec{v}_\ell) f_{a0}/v^\ell \tag{2.3-60}$$

where for $\ell = 1,2$ (the dominant harmonics)

$$S_{aB}^{(1)}(f_{a0},f_B^{(1)}) = 2\vec{v}\cdot\vec{S}_{aB}^{(1)}(v) f_{a0}/v_{ta}^2 \tag{2.3-61}$$

and

$$S_{aB}^{(2)}(f_{a0}, f_B^{(2)}) = 2x_a^2[3/2(v_\parallel/v)^2\hat{n}_\parallel\hat{n}_\parallel - \overleftrightarrow{I}/2]:\overleftrightarrow{S}_{aB}^{(2)}(v)f_{a0} \tag{2.3-62}$$

with

$$\vec{S}_{aB}^{(1)}(v) = \gamma_{aB}^{s}(v)\vec{v}_B \tag{2.3-63}$$

and

$$\overleftrightarrow{S}_{aB}^{(2)}(v) = \gamma_{aB}^{P}(v)\delta P_B\hat{v}\hat{v} \quad . \tag{2.3-64}$$

Here

$$\gamma_{eB}^{s} = n_B\Gamma_{eB}/3[\int_{\vec{v}'}(1 + 6/5(v'/v_{te})^2)v'f_B^{(1)}(v')d^3v'/v^3]/[\int_{\vec{v}'}v_\parallel' f_B^{(1)}(v')d^3v'] \tag{2.3-65}$$

and

$$\gamma_{eB}^{P} = \Gamma_{eB}/(5m_BP_2(v_\parallel/v))[\int_{\vec{v}'}(2 + 12/7(v'/v_{te})^2 - 2/3(v/v_{te})^2)v'^2f_B^{(2)}(v')d^3v'/v^5]/[\int_{\vec{v}'}v'^2P_2(v_\parallel'/v')f_B^{(2)}(v')d^3v'] \tag{2.3-66}$$

for a = e and

$$\gamma^{s}_{aB} = [4\pi m_a n_B v_{ta}^2 \Gamma_{aB} f_B^{(1)}(v)/(2m_B v_{\parallel}) + [n_B \Gamma_{aB}/3 \int_{\vec{v}'} (m_a/m_B - 2 + 6/5(v/v_{ta})^2) f_B^{(1)}(v') d^3v'/(v')^2]]/[\int_{\vec{v}'} v'_{\parallel} f_B^{(1)}(v') d^3v'] \tag{2.3-67}$$

and

$$\gamma^{p}_{aB} = [4\pi m_a \Gamma_{aB} f_B^{(2)}(v)/(2m_B x_a^2 P_2(v_{\parallel}/v)) + [\Gamma_{aB}/(5P_2(v_{\parallel}/v)) \int_{\vec{v}'} (2m_a/m_B - 3 + 12/7(v/v_{ta})^2 - 2/3(v'/v_{ta})^2) f_B^{(2)}(v') d^3v' /(v')^3]]/[\int_{\vec{v}'} m_B v'^2 P_2(v'_{\parallel}/v') f_B^{(2)}(v') d^3v'] \tag{2.3-68}$$

for $a \neq e$.

2.4 THE MULTISPECIES MOMENT EQUATIONS

Although the properties of a plasma can be completely determined by solving the kinetic equations for the particle distribution function and then computing the desired quantities from this function, a knowledge of the macroscopic or averaged properties suffices to describe many plasma phenomena of interest. In this section the multispecies fluid equation governing a strongly rotating beam injected plasma are developed.

To obtain an appropriate set of multispecies fluid equations, eq.(2.2-45) is multiplied by the tensor function $\overleftrightarrow{Z}_a = m_a(\vec{V}\vec{V}\vec{V}\cdots\vec{V}_\ell)$ and the result is integrated over all velocity space yielding a generalized transfer equation of the form:

$$\partial\overleftrightarrow{T}_{a\ell}/\partial t + \vec{\nabla}\cdot\overleftrightarrow{T}_{a\ell} + \vec{\nabla}\cdot\overleftrightarrow{T}_{a(\ell+1)} + (\vec{\nabla}\cdot\vec{u}_{aE})\overleftrightarrow{T}_{a\ell} + \ell[(\partial\vec{u}_{aE}/\partial t + \vec{u}_{aE}\cdot\vec{\nabla}\vec{u}_{aE})\overleftrightarrow{T}_{a(\ell-1)}]_\ell + \ell[T_{a\ell}\cdot\vec{\nabla}\vec{u}_{aE}]_\ell - \ell[e_a/m_a(\vec{E} + \vec{u}_{aE}\times\vec{B})\overleftrightarrow{T}_{a(\ell-1)} - \vec{\Omega}_a\times\overleftrightarrow{T}_{a\ell}]_\ell = \overleftrightarrow{L}_{a\ell} + \overleftrightarrow{N}_{a\ell} \tag{2.4-1}$$

where here for notational convenience, the subscripts on the time derivative operator has been dropped in order to accomodate radial transport and other higher order effects and

$$\overleftrightarrow{T}_{a\ell} = m_a \int_{\vec{V}} (\vec{V}\vec{V}\vec{V}\cdots\vec{V}_\ell) f_a d^3V = m_a n_a (\vec{V}\vec{V}\vec{V}\cdots\vec{V}_\ell)_a \tag{2.4-2}$$

is an ℓth order tensor, with $\overleftrightarrow{L}_{a\ell}$ and $\overleftrightarrow{N}_{a\ell}$ being the collisional and external source moment operators defined such that

$$\overleftrightarrow{L}_{a\ell} = m_a \int_{\vec{V}} (\vec{V}\vec{V}\vec{V}\cdots\vec{V}_\ell) C(f_a) d^3V \tag{2.4-3}$$

and

$$\overleftrightarrow{N}_{a\ell} = m_a \int_{\vec{V}} (\vec{V}\vec{V}\vec{V}\cdots\vec{V}_\ell) S(f_a) d^3V \tag{2.4-4}$$

respectively. Here, the symbol $[\quad]_\ell$ denotes a symmetrization process where a perfectly symmetric tensor is formed by permuting the tensor in all $\ell!$ ways, adding the result, and dividing by $\ell!$.

The individual moment equations can be generated from eq.(2.4-1) by letting ℓ take on non-negative integer values. In particular the lowest order even parity moment, i.e. $\ell = 0$, yields a statement of particle continuity, namely

$$\partial n_a/\partial t + \vec{\nabla}\cdot\vec{\Gamma}_a = N_{a0} \tag{2.4-5}$$

where $\vec{\Gamma}_a = n_a\vec{v}_a$ is the particle flux, N_{a0} is a particle source term due to ionization, recombination and

charge exchange and $\vec{v}_a$ is the average fluid velocity as seen by an observer in the lab frame

$$\vec{v}_a = [\int_{\vec{V}} (\vec{V} + \vec{u}_{aE}) f_a d^3V]/n_a = (\vec{V}_a + \vec{u}_{aE}) \ . \tag{2.4-6}$$

The lowest order even parity moment of eq.(2.4-1) gives the momentum balance equation

$$\partial(m_a\vec{\Gamma}_a)/\partial t - m_a\vec{u}_{aE}\partial n_a/\partial t + m_a n_a \vec{v}_a \cdot \vec{\nabla}\vec{u}_{aE} + \vec{\nabla}\cdot(m_a n_a \vec{u}_{aE}\vec{V}_a) + \vec{\nabla}\cdot[m_a n_a (\vec{V}\vec{V})_a] - e_a(n_a\vec{E} + \vec{\Gamma}_a \times \vec{B}) = \vec{R}_{a1} + \vec{S}_{a1} \tag{2.4- }$$

where here owing to the Galilean invariance of the collision operator, the collisional friction and external momentum source operators have been defined such that

$$\vec{R}_{a1} = m_a \int_{\vec{v}} \vec{v} C(f_a) d^3v = m_a \int_{\vec{V}} \vec{V} C(f_a) d^3V = \vec{L}_{a1} \tag{2.4-8}$$

and

$$\vec{S}_{a1} = m_a \int_{\vec{v}} \vec{v} S(f_a) d^3v = m_a \int_{\vec{V}} \vec{V} S(f_a) d^3V = \vec{N}_{a1} \tag{2.4-9}$$

respectively.

To cast eq.(2.4-7) into a conservation form commonly found in the literature [7,8], eqs.(2.4-5) and (2.4-6) can be used in conjunction with eq.(2.4-7) to give

$$\partial(m_a\vec{\Gamma}_a)/\partial t = (\vec{R}_{a1} + \vec{S}_{a1} + e_a[n_a\vec{E} + \vec{\Gamma}_a \times \vec{B}]) - \vec{\nabla}\cdot\overleftrightarrow{M}_a \tag{2.4-10}$$

where

$$\overleftrightarrow{P}_a = m_a\int_{\vec{v}}(\vec{v} - \vec{v}_a)(\vec{v} - \vec{v}_a)d^3v = m_a n_a[((\vec{v} - \vec{v}_a)(\vec{v} - \vec{v}_a))_a] \tag{2.4-11}$$

and

$$\overleftrightarrow{M}_a = m_a\int_{\vec{v}}\vec{v}\vec{v}f_a d^3v = n_a m_a\vec{v}_a\vec{v}_a + \overleftrightarrow{P}_a$$

is the total momentum stress tensor which is composed of a kinetic and pressure stress term. Physically eq.(2.4-10) exhibits the fact that the time rate of change of momentum flux is equal to the difference between the source terms due to momentum flux generation arising from interspecies collisions, the external momentum input and electromagnetic force density , and the momentum loss due to kinetic and viscous transport (divergence of momentum flux). Selecting the toroidal component of eq.(2.4-10) yields an expression for the conservation of angular momentum:

$$\partial(m_a R^2\hat{e}_\phi\cdot\vec{\Gamma}_a)/\partial t = e_a\gamma'(\hat{e}_\psi\cdot\vec{\Gamma}_a)/(2\pi) + R^2\hat{e}_\phi\cdot(\vec{R}_{a1} + \vec{S}_{a1} + e_a n_a\vec{E}) - R^2\hat{e}_\phi\cdot(\vec{\nabla}\cdot\overleftrightarrow{M}_a) \tag{2.4-12}$$

where the term

$$\hat{e}_\psi \cdot \vec{f}_a = n_a \int_{\vec{v}} (\hat{e}_\psi \cdot \vec{v}) f_a d^3v \tag{2.4-13}$$

is the radial particle flux.

The next higher even parity moment (i.e. $\ell = 2$) of eq.(2.4-1) yields the pressure tensor equation:

$$\partial \overleftrightarrow{T}_{a2}/\partial t + \vec{\nabla} \cdot (\vec{u}_{aE} \overleftrightarrow{T}_{a2}) + \vec{\nabla} \cdot \overleftrightarrow{T}_{a3} + m_a n_a (\vec{V}_a [\partial \vec{u}_{aE}/\partial t + \vec{u}_{aE} \cdot \vec{\nabla} \vec{u}_{aE}] + [\partial \vec{u}_{aE}/\partial t + \vec{u}_{aE} \cdot \vec{\nabla} \vec{u}_{aE}] \vec{V}_a) + \overleftrightarrow{T}_{a2} \cdot \vec{\nabla} \vec{u}_{aE} + (\overleftrightarrow{T}_{a2} \cdot \vec{\nabla} \vec{u}_{aE})^T + e_a/m_a (\vec{B} \times \overleftrightarrow{T}_{a2} + \overleftrightarrow{T}_{a2} \times \vec{B}) = \overleftrightarrow{L}_{a2} + \overleftrightarrow{N}_{a2} + e_a n_a (\vec{V}_a [\vec{E} + \vec{u}_{aE} \times \vec{B}] + [\vec{E} + \vec{u}_{aE} \times \vec{B}] \vec{V}_a) \tag{2.4-14}$$

where $\overleftrightarrow{T}_{a3} = m_a n_a (\vec{V}\vec{V}\vec{V})_a$ is an intrinsic heat tensor as seen by an observer in the frame moving with average velocity $\vec{u}_{aE}$. Contraction of eq.(2.4-14) yields an expression for the time evolution of the intrinsic scalar pressure, namely

$$\partial (3T_{a2}/2)/\partial t + \vec{\nabla} \cdot (m_a n_a (V^2 \vec{V})_a/2) + 3T_{a2} \vec{u}_{aE}/2) + \overleftrightarrow{T}_{a2} : \vec{\nabla} \vec{u}_{aE} + m_a n_a \vec{V}_a \cdot (\partial \vec{u}_{aE}/\partial t + \vec{u}_{aE} \cdot \vec{\nabla} \vec{u}_{aE}) = (L_{a2} + N_{a2}) + e_a n_a \vec{V}_a \cdot (\vec{E} + \vec{u}_{aE} \times \vec{B}) \tag{2.4-15}$$

where

$$T_{a2} = \mathrm{TRACE}(\overleftrightarrow{T}_{a2})/3 \tag{2.4-16}$$

is an intrinsic scalar pressure

$$m_a n_a (V^2\vec{V})_a/2 = m_a/2\int_{\vec{V}} V^2\vec{V} f_a d^3V \tag{2.4-17}$$

is an intrinsic heat conduction vector and

$$L_{a2} = m_2/2\int_{\vec{V}} V^2 C(f_a) d^3V \tag{2.4-18}$$

and

$$N_{a2} = m_a/2\int_{\vec{V}} V^2 S(f_a) d^3V \tag{2.4-19}$$

are the collisional heat generation operator and external energy source term due to auxillary heating as seen by an observer in the moving frame.

To obtain a conservation equation for the energy density, eq.(2.4-15) can be transformed from a coordinate frame moving with the plasma to the lab frame where $\vec{v}_a = \vec{u}_{aE} + \vec{V}_a$ and the result used in conjunction with eq.(2.4-5) through (2.4-11) to give

$$\partial(m_a n_a v_a^2/2 + 3p_a/2)/\partial t = (R_{a2} - \vec{u}_{aE}\cdot\vec{R}_{a1} + S_{a2}) + (e_a n_a \vec{v}_a\cdot\vec{E}) - \vec{\nabla}\cdot(\vec{q}_a + [m_a n_a v_a^2/2 + 5p_a/2]\vec{v}_a + \vec{v}_a\cdot\overleftrightarrow{\Pi}_a) \tag{2.4-20}$$

where the term $m_a n_a v_a^2/2 + 3p_a/2$ represents the energy density which is composed of an inertial or kinetic energy component and an internal energy (pressure) component,

$$\vec{q}_a = m_a/2\int_{\vec{v}}(\vec{v} - \vec{v}_a)^2(\vec{v} - \vec{v}_a)f_a d^3v = m_a n_a((\vec{v} - \vec{v}_a)^2(\vec{v} - \vec{v}_a))_a \tag{2.4-21}$$

is the conductive heat flux (heat conduction vector)

$$R_{a2} = m_a/2\int_{\vec{v}} v^2 C(f_a) d^3v \tag{2.4-22}$$

and

$$S_{a2} = m_a/2\int_{\vec{v}} v^2 S(f_a) d^3v \tag{2.4-23}$$

are the collisional heat generation and external energy source operators as seen by an observer in the lab frame. Note here that the pressure tensor has been decomposed into its scalar and viscous components

$$\overleftrightarrow{P}_a = p_a\overleftrightarrow{I} + \overleftrightarrow{\Pi}_a \tag{2.4-24}$$

with

$$p_a = \mathrm{TRACE}(\overleftrightarrow{P}_a)/3 \tag{2.4-25}$$

and

$$\overleftrightarrow{\Pi}_a = m_a \int_{\vec{v}} [(\vec{v} - \vec{v}_a)(\vec{v} - \vec{v}_a) - (\vec{v} - \vec{v}_a)^2 \overleftrightarrow{I}/3] f_a d^3v = m_a n_a [((\vec{v} - \vec{v}_a)(\vec{v} - \vec{v}_a))_a - ((\vec{v} - \vec{v}_a)^2)_a \overleftrightarrow{I}/3] \tag{2.4-26}$$

being the scalar (isotropic) pressure and viscous tensor components respectively and the term

$$\vec{Q}_a = \vec{q}_a + (m_a n_a v_a^2/2 + 5p_a/2)\vec{v}_a + \vec{v}_a \cdot \overleftrightarrow{\Pi}_a \tag{2.4-27}$$

represents the energy flux. Physically, the time rate of change of the energy density is manifested as the difference between the energy source terms due to collisional momentum and heat generation, auxillary heating and the power fed into the system by the electric field, and the energy loss due to heat conduction, convective and viscous energy dissipation (divergence of the total energy flux vector).

The next order moment equation, which governs the time evolution of the total energy flux vector, can be obtained from the general tensor transfer equation by setting $\ell = 3$ in this equation and making one contraction. Although tedious in nature, it can be shown that upon carrying out this mathematical process, transforming to a coordinate frame which is moving with average velocity $\vec{v}_a$ and using

the result in conjunction with eqs.(2.4-5) through (2.4-27) yields the following moment equation:

$$\partial(\vec{q}_a + [m_a n_a v_a^2/2 + 5p_a/2]\vec{v}_a + \vec{v}_a\cdot\overleftrightarrow{\Pi}_a)/\partial t = (\vec{R}_{a3} + \vec{S}_{a3} + e_a/m_a[(\vec{q}_a + [m_a n_a v_a^2/2 + 5p_a/2]\vec{v}_a + \vec{v}_a\cdot\overleftrightarrow{\Pi}_a)\times\vec{B} + (\vec{E}\cdot[3p_a\overleftrightarrow{I}/2 + \overleftrightarrow{M}_a])] - (\vec{\nabla}\cdot\overleftrightarrow{G}_a) \tag{2.4-28}$$

where

$$\vec{R}_{a3} = m_a/2\int_{\vec{v}} v^2\vec{v}C(f_a)d^3v \tag{2.4-29}$$

and

$$\vec{S}_{a3} = m_a/2\int_{\vec{v}} v^2\vec{v}S(f_a)d^3v \tag{2.4-30}$$

are the collisional rate of heat flux generation (heat friction) and external source of energy flux as seen in the lab frame respectively, and $\overleftrightarrow{G}_a$ is a complex energy weighted stress tensor defined such that

$$\overleftrightarrow{G}_a = (m_a n_a v_a^2/2 + \mathrm{TRACE}(\overleftrightarrow{P}_a)/2)\vec{v}_a\vec{v}_a + v_a^2\overleftrightarrow{P}_a/2 + 2([\vec{v}_a(\vec{v}_a\cdot\overleftrightarrow{P}_a)]_2 + [\vec{v}_a\vec{q}_a]_2 + \vec{v}_a\cdot(m_a n_a(\vec{V}'\vec{V}'\vec{V}')_a) + \overleftrightarrow{\Theta}_a \tag{2.4-31}$$

with

$$\overleftrightarrow{\Theta}_a = m_a n_a/2[((\vec{v} - \vec{v}_a)^2(\vec{v} - \vec{v}_a)(\vec{v} - \vec{v}_a))_a]$$

being an energy weighted pressure stress tensor and

$$m_a n_a(\vec{V}'\vec{V}'\vec{V}') = m_a n_a((\vec{v} - \vec{v}_a)(\vec{v} - \vec{v}_a)(\vec{v} - \vec{v}_a))_a$$

is an intrinsic heat tensor.

Now the moment equations as developed thus far are applicable to each point in configuration space. To obtain a form of the moment equations which are amenable to the study of transport theory in a toroidally confined axisymmetric plasma, the multispecies moment equations can be spatially averaged over a magnetic surface thereby reducing the set of non-ignorable spatial coordinates from two to one (recall that for an axisymmetric configuration the toroidal coordinate is cyclic in a Lagrangian sense). In particular the flux surface average operator is defined such that [82,92]

$$\langle A \rangle = \int_0^{2\pi} \sqrt{g} A d\chi / \int_0^{2\pi} \sqrt{g} d\chi \tag{2.4-32}$$

where

$$\sqrt{g} = (\hat{e}_\psi \cdot [\hat{e}_\chi \times \hat{e}_\phi])^{-1} \tag{2.4-33}$$

is the coordinate basis Jacobian. In view of this definition it can be shown that [82,92] the flux surface average operator obeys the following identity relationships:

$$\langle \vec{B} \cdot \vec{\nabla} \vec{A} \rangle = 0 \tag{2.4-34}$$

and

$$\langle \vec{\nabla} \cdot \vec{A} \rangle = 1/\upsilon' \partial (\upsilon' \langle \hat{e}_\psi \cdot \vec{A} \rangle)/\partial \psi \tag{2.4-35}$$

where

$$\upsilon' = 2\pi \int_0^{2\pi} \sqrt{g} d\chi \tag{2.4-36}$$

and $\upsilon(\psi) = \int_0^\psi \upsilon'(\psi'')d\psi''$ is the volume enclosed by the flux surface ψ = constant. By use of eqs.(2.4-32) through (2.4-36) the angular momentum conservation equation can be flux surfaced averaged to give

$$\partial \langle m_a R^2 \hat{e}_\phi \cdot \vec{\Gamma}_a \rangle / \partial t = \gamma' e_a \Gamma_a^\psi / (2\pi) + \langle R^2 \hat{e}_\phi \cdot (\vec{R}_{a1} + \vec{S}_{a1} + e_a n_a \vec{E}^A) - (1/\upsilon' \partial (\upsilon' M_a^\psi)/\partial \psi) \tag{2.4-37}$$

where

$$\Gamma_a^\psi = \langle \int_{\vec{v}} \hat{e}_\psi \cdot \vec{v} f_a d^3v \rangle = \langle \hat{e}_\psi \cdot \Gamma_a^\psi \rangle \tag{2.4-38}$$

and

$$M_a^\psi = \langle m_a R^2 \hat{e}_\phi \hat{e}_\psi : \int_{\vec{v}} \vec{v}\vec{v} f_a d^3v \rangle \tag{2.4-39}$$

are the flux surfaced averaged radial components of the particle flux and angular momentum respectively. Likewise flux surface averaging the energy conservation equation gives

$$\partial \langle m_a n_a v_a^2/2 + 3p_a/2 \rangle / \partial t = \langle (R_{a2} - \vec{v}_a \cdot \vec{R}_{a1} + S_{a2} + e_a n_a \vec{v}_a \cdot \vec{E}) \rangle - (1/\upsilon' \partial (\upsilon' Q_a^\psi)/\partial \psi) \tag{2.4-40}$$

where

$$Q_a^\psi = \langle m_a/2 \int_{\vec{v}} (\hat{e}_\psi \cdot \vec{v}) v^2 f_a d^3v \rangle \tag{2.4-41}$$

is a radial kinetic energy flux. The above equation can be recast into a form which is more appropiate to a strongly rotating beam injected plasma by including the electrostatic potential into the expression for the energy density. In particular noting that

$$n_a \vec{v}_a \cdot \vec{E} = \Phi \vec{\nabla} \cdot (n_a \vec{v}_a) - \vec{\nabla} \cdot (n_a \vec{v}_a \Phi) + n_a \vec{v}_a \cdot \vec{E}^A \tag{2.4-42}$$

then eq. (2.4-40) can be expressed as follows:

$$\partial\langle m_a n_a v_a^2/2 + 3p_a/2 + n_a e_a \Phi\rangle/\partial t = \langle \hat{R}_{a2} + \hat{S}_{a2} - e_a n_a \vec{v}_a \cdot \vec{E}^A\rangle + \langle e_a n_a \partial\Phi/\partial t\rangle - 1/\upsilon' \partial(\upsilon' \hat{Q}_a^{\psi})/\partial\psi \tag{2.4-43}$$

where

$$\hat{R}_{a2} = \int_{\vec{v}} (m_a v^2/2 + e_a \Phi) C_a d^3v \tag{2.4-44}$$

$$\hat{S}_{a2} = \int_{\vec{v}} (m_a v^2/2 + e_a \Phi) S_a d^3v \tag{2.4-45}$$

and

$$\hat{Q}_a^{\psi} = \langle \int_{\vec{v}} (m_a v^2/2 + e_a \Phi)(\vec{v} \cdot \hat{e}_{\psi}) f_a d^3v\rangle \tag{2.4-46}$$

is the total radial flux. Physically, $\hat{Q}_a^{\psi}$ encompasses the radial components of the total energy flux vector due to the conductive and viscous heat transfer as well as particle, inertial and electrostatic energy convection.

To obtain a moment equation which governs the radial component of the total stress tensor, the toroidal tensor product is taken with the pressure tensor equation and the resulting equation is transformed from a coordinate frame moving with the plasma to the lab frame and flux surface

averaged to give:

$$\partial\langle R^4\hat{e}_\phi\hat{e}_\phi:\overleftrightarrow{M}_a\rangle/\partial t = \gamma' e_a M_a^\psi/(2\pi m_a) + \langle R^4\hat{e}_\phi\hat{e}_\phi:(\overleftrightarrow{R}_{a2} + \overleftrightarrow{S}_{a2})/2\rangle + \langle e_a n_a R^4\hat{e}_\phi\hat{e}_\phi:\vec{v}_a\vec{E}^A\rangle - (1/\upsilon'\partial(\upsilon' I_a^\psi)/\partial\psi) \tag{2.4-47}$$

where

$$I_a^\psi = \langle m_a/2(R^4\hat{e}_\phi\hat{e}_\phi\hat{e}_\psi:\int_{\vec{v}}(\vec{v}\vec{v}\vec{v})f_a d^3v)\rangle \tag{2.4-48}$$

is the radial component of the energy stress tensor as seen from the lab frame.

Finally to complete the set of moment equations required for transport calculations in tokamaks, the toroidal component of the energy flux equation is selected and the resulting expression is flux surface averaged to give

$$\partial\langle R^2\hat{e}_\phi\cdot(\vec{q}_a + (m_a n_a v_a^2/2 + 5p_a/2)\vec{v}_a + \vec{v}_a\cdot\overleftrightarrow{\Pi}_a)/\partial t = \gamma' e_a/(2\pi m_a)(q_a^\psi + \langle(m_a v_a^2/2 + 5p_a/(2n_a))\hat{e}_\psi\cdot\vec{\Gamma}_a + \hat{e}_\psi\vec{v}_a:\overleftrightarrow{\Pi}_a\rangle) + \langle R^2\hat{e}_\phi\cdot(\vec{R}_{a3} + \vec{S}_{a3})\rangle + \langle e_a/m_a[R^2\hat{e}_\phi\vec{E}:(3p_a\overleftrightarrow{I}/2 + \overleftrightarrow{M}_a)]\rangle - (1/\upsilon'\partial(\upsilon' G_a^\psi)/\partial\psi) \tag{2.4-49}$$

where

$$q_a^\psi = \langle m_a/2(\int_{\vec{v}}(\vec{v} - \vec{v}_a)^2(\vec{v} - \vec{v}_a)\cdot\hat{e}_\psi f_a d^3v)\rangle \tag{2.4-50}$$

and

$$G_a^{\psi} = \langle m_a/2(R^2\hat{e}_{\phi}\hat{e}_{\psi}:\int_{\vec{v}} v^2\vec{v}\vec{v}f_a d^3v)\rangle \tag{2.4-51}$$

are the radial components of the heat conduction vector and the energy weighted stress tensors respectively. Furthermore since this thesis focuses primarily on particle, momentum, and heat transport, it is more convenient to express eq.(2.4-50) in terms of the toroidal component of the heat conduction vector. Noting that on the transport time scale the average frame velocity is $\vec{u}_{aE} = \omega_0(\chi,\psi)R^2\hat{e}_{\phi}$, then using eq.(2.4-38) in conjunction with (2.4-50) yields:

$$\begin{aligned}
&\partial\langle R^2\hat{e}_{\phi}\cdot(\vec{\bar{q}}_a + \vec{u}_{aE}\cdot(\overleftrightarrow{M}_a - p_a\overleftrightarrow{I}))\rangle/\partial t = \gamma' e_a\bar{q}_a^{\psi}/(2\pi m_a) + \\
&\gamma' e_a\langle\hat{e}_{\psi}\vec{u}_{aE}:\overleftrightarrow{M}_a\rangle/(\pi m_a) + e_a/m_a\langle R^2\hat{e}_{\phi}\vec{E}^A:(\overleftrightarrow{M}_a - p_a\overleftrightarrow{I}) + \\
&\langle R^2\hat{e}_{\phi}\cdot(\vec{R}_{a3} - 5p_a\vec{R}_{a1}/(2m_a n_a))\rangle + \langle R^2\hat{e}_{\phi}\cdot(\vec{S}_{a3} - 5p_a\vec{S}_{a1}/ \\
&(2m_a n_a))\rangle - 1/\upsilon'\partial(\upsilon'[G_a^{\psi} - 5p_a M_a^{\psi}/(2m_a n_a)])
\end{aligned} \tag{2.4-52}$$

where

$$\vec{\bar{q}}_a = \vec{q}_a - m_a u_{aE}^2\vec{\Gamma}_a/2 \tag{2.4-53}$$

and therefore

$$\bar{q}_a = \langle \hat{e}_\psi \cdot (\vec{q}_a - m_a u_{aE}^2 \vec{\Gamma}_a/2) \rangle \quad . \tag{2.4-54}$$

In principal eq.(2.4-52) gives a detailed expression from which the radial conductive heat flux can be obtained, however its present form is very inconvenient for the kinetic analysis which is to be carried out in this thesis. To obtain a more desirable form, eqs.(2.4-47) and (2.4-48) can be combined with (2.4-52) to eliminate the term $\gamma' e_a M_a^\psi/(2\pi m_a)$ and the result transformed to the rotating frame to give

$$\partial\langle R^2 \hat{e}_\phi \cdot (\vec{q}_a - 3u_E^{(0)2}\vec{\Gamma}_a/2 + \vec{u}_E^{(0)} \cdot \overleftrightarrow{M}_a)\rangle/\partial t = \gamma' e_a q_a^\psi/(2\pi m_a) + e_a/m_a \langle R^2 \hat{e}_\phi \vec{E}^A : (3p_a \overleftrightarrow{I}/2 + \overleftrightarrow{P}_a - m_a n_a \vec{u}_E^{(0)} \vec{u}_E^{(0)})\rangle + \langle R^2 \hat{e}_\phi \cdot (\vec{L}_{a3} - 5p_a \vec{L}_{a1}/(2m_a n_a))\rangle + \langle R^2 \hat{e}_\phi \cdot (\vec{N}_{a3} - 5p_a \vec{N}_{a1}/(2m_a n_a))\rangle + \langle R^2 \hat{e}_\phi \cdot \vec{u}_E^{(0)} (L_{a2} + N_{a2})\rangle - 1/\upsilon' \partial(\upsilon'[\bar{\theta}_a^\psi - 5p_a \bar{\Pi}_a^\psi/(2m_a n_a)])/\partial\psi \tag{2.4-55}$$

where

$$\bar{\Pi}_a^\psi = \langle 2m_a R^2 \hat{e}_\phi \hat{e}_\psi : [\int_{\vec{V}} \vec{V}_\parallel \vec{V}_\perp f_a d^3V]_2 \rangle \tag{2.4-56}$$

and

$$\bar{\theta}_a^\psi = \langle 2(m_a/2R^2 \hat{e}_\phi \hat{e}_\psi : [\int_{\vec{V}} \vec{V}_\parallel \vec{V}_\perp V^2 f_a d^3V]_2)\rangle \tag{2.4-57}$$

with

$$<R^2\hat{e}_\phi \cdot \vec{u}_E^{(0)} (L_{a2} + N_{a2})>$$

(2.4-58)

being that component of the total energy due to the non-inertial coordinate frame's collisional heat generation with the background plasma species and beam particles. Furthermore, all terms $> O(\delta^1)$ have been neglected in formulating the above expression.

To render the multispecies moment equations analytically tractable, some type of ordering scheme must be employed. Traditionally the moment equations have been reduced by using a transport ordering scheme in which the particle distribution function was expressed as a Maxwellian plus an $O(\delta^1)$ correction. Consequently to the lowest order $\vec{v}_a \cdot \hat{n}_\phi \sim O(\delta^1)$. However with the large toroidal rotational speeds attained during external momentum injection it becomes necessary to modify the usual transport ordering [7] to accomodate centrifugal inertial effects. In this case the lowest order flow is zeroth order in δ . Consequently all quantities which are a function of the lowest order flow will be modified accordingly. Furthermore with strong rotation, the lowest order density and electrostatic potential are no longer constant on a flux surface but instead possess poloidal variations over the flux surface. As a result the lowest order contribution to

the collisional and heat friction operators, and the viscous and energy stess tensors will similarily posses poloidal variations. Finally even though the order of the external momentum and energy sources is dependent upon both the type and strength of the source employed, for most transport applications of interest the external sources can be assumed to be of the same relative order as that of the collisional and heat friction operators.

2.4 THE FLUX-FRICTION RELATIONSHIPS

One of the primary goals of transport theory is to obtain fundamental expressions for the cross field particle, momentum and heat fluxes in terms of the thermodynamic driving forces. In this section the multispecies fluid equations are used in conjunction with the lowest order gyroangle dependent component of the particle distribution to obtain the functional structure of the lowest order radial particle, momentum and heat fluxes in a strongly rotating beam injected plasma. In particular, the physical mechanisms responsible for these fluxes will be exposed and their implications discussed.

To obtain the flux-friction relationships the steady state version of the flux surface averaged angular momentum conservation equation and toroidal component of the heat balance equation [c.f. eqs.(2.4-37) and (2.4-55)] are solved for the lowest order radial particle and heat fluxes respectively yielding the general expression:

$$I^{\psi}_{aj}/T^{j}_{a} = -2\pi/(\gamma' e_a) \langle R^2 \hat{e}_{\phi} \cdot (\vec{F}_{a(2j+1)} + \vec{\xi}_{a(2j+1)}) \rangle \tag{2.5-1}$$

for j = 0,1 where

$$\vec{F}_{a(2j+1)} = \sum_b [m_a \int_{\vec{V}} \vec{V} \bar{L}_j^{3/2} (x_a^2) C_{ab}^{(1)} (\hat{f}_{a1}^{(1)}, \hat{f}_{b1}^{(1)}) d^3V] \tag{2.5-2}$$

are the frictional forces and

$$\vec{\xi}_{a(2j+1)} = \vec{W}_{a(2j+1)} - 1/\upsilon'\partial(\upsilon' K^{\psi}_{a(2j+1)})/\partial\psi\,\hat{e}_{\phi} \tag{2.5-3}$$

are the net momentum and energy flux input terms with

$$\vec{W}_{a(2j+1)} = m_a \int_{\vec{V}} \vec{V}\bar{L}_j^{3/2}(x_a^2) C_{ab}^{(1)}(F_a, f_B^{(1)})\, d^3V \tag{2.5-4}$$

and

$$K^{\psi}_{a(2j+1)} = 2m_a R^2 \hat{e}_{\phi}\hat{e}_{\psi} : [\int_{\vec{V}} \vec{V}_{\parallel}\vec{V}_{\perp}\bar{L}_j^{3/2}(x_a^2) f_{a1}^{(1)}\, d^3V]_2 \tag{2.5-5}$$

being the pure beam input and drag terms respectively. Note that in obtaining the above expressions the electric field induced by the time variation of the magnetic field has been neglected since the time scale which characterizes the dynamical evolution of the flux surfaces is higher order in δ .

In view of the functional structure of eq.(2.5-3), it follows that the lowest order nonvanishing contribution to the momentum and energy flux drag forces arise from the gyroangle dependent component of the particle distribution function. Therefore upon combining eqs.(2.2-49) with (2.5-5) yields:

$$K^{\psi}_{a(2j+1)} = -\eta_{da} R^3 \{x_a^2 \bar{L}_j^{3/2}(x_a^2)\}/(\sqrt{g}\{x_a^2\})\partial(R^{-1}\vec{u}_{aE}\cdot\hat{n}_{\phi})/\partial\chi \tag{2.5-6}$$

where $\eta_{da} = p_a/\Omega_a$ is the gyroviscosity coefficient. Combining eqs.(2.5-3) and (2.5-6) yields

$$\vec{\xi}_{a(2j+1)} = \vec{W}_{a(2j+1)} - (n_a m_a V_a^{2j} \gamma_{da(2j+1)} (\vec{V}_a \cdot \hat{n}_\phi)/(2)^j)\, \hat{e}_\phi \tag{2.5-7}$$

for j = 0,1 where

$$\gamma_{da(2j+1)} = -(2)^j/(n_a m_a V_a^{2j} (\vec{V}_a \cdot \hat{n}_\phi))(R^{-1}\partial[\eta_{da} R^3 \{x_a^2 \bar{L}_j^{3/2}(x_a^2)\}/\{x_a^2\}$$
$$\partial(R^{-1}\vec{u}_{aE} \cdot \hat{n}_\phi)/\partial \ell_\chi]/\partial \ell_\psi) \tag{2.5-8}$$

is the viscous drag coefficient. Here

$$1/\sqrt{g} = |\hat{e}_\psi||\hat{e}_\chi|/R \quad ; \quad \partial/\partial \ell_\psi = |\hat{e}_\psi|\partial/\partial\psi$$
$$\partial/\partial \ell_\chi = |\hat{e}_\chi|\partial/\partial\chi \quad ; \quad \upsilon' = R/|\hat{e}_\psi| \tag{2.5-9}$$

In effect, eq.(2.5-8) is a statement of external momentum balance in which the pure momentum input is compensated for by a radial viscous drag. Note that in obtaining eqs.(2.5-6) and (2.5-8), the total lowest order correction to the $O(\delta^0)$ plasma mass flow (i.e. eq.(2.2-44) has been utilized.

Now since the gyroangle dependent component and the gyrotropic component of the particle distribution function give rise to different contributions to the radial fluxes, it is convenient to segregate the lowest order cross field

by the gyrotropic and gyroangle dependent components of the particle distribution function. In this regard the geometric relationship $R^2\hat{e}_\phi = I\hat{n}_\parallel/B + \gamma'(\hat{e}_\psi \times \hat{n}_\parallel)/(2\pi B)$ can be used in conjunction with eqs.(2.5-1) to give

$$I^{\psi}_{aj}/T^j_a = I^{c}_{aj}/T^j_a + I^{nc}_{aj}/T^j_a + I^{B}_{aj}/T^j_a \tag{2.5-10}$$

where

$$I^{c}_{aj}/T^j_a = -\langle(\hat{e}_\psi \times \hat{n}_\parallel)\cdot\vec{F}_{a(2j+1)}/(m_a\Omega_a)\rangle \tag{2.5-11}$$

are the classical particle and heat fluxes,

$$I^{nc}_{aj}/T^j_a = -2\pi/(\gamma' e_a)\langle I\hat{n}_\parallel\cdot\vec{F}_{a(2j+1)}/B\rangle \tag{2.5-12}$$

are the neoclassical fluxes and

$$I^{B}_{aj}/T^j_a = -2\pi/(\gamma' e_a)\langle R^2\hat{e}_\phi\cdot\vec{\xi}_{a(2j+1)}\rangle \tag{2.5-13}$$

are the beam driven flux components.

The classical fluxes are driven by the perpendicular components of the frictional forces arising from the diamagnetic counterstreaming of the various species on the flux surface [99]. Because of the rotational invariance of the collision operator, the classical fluxes arise solely from the gyroangle dependent component of the particle

distribution function.

Now with respect to the neoclassical component of the total cross field fluxes, it follows that since this component is proportional to the parallel component of the frictional forces then it will depend on the gyrotropic component of the distribution function. However since the frictional forces themselves will be dependent on the lowest order flows, then the neoclassical component of the cross field fluxes will differ significantly from the neoclassical component obtained in the weak rotation case since the bulk plasma flows will exhibit functional dependencies characteristic of a strongly rotating momentum injected plasma such as inertial and drag effects. In this respect eq.(2.5-12) represents a "modified" neoclassical component. To understand this concept in terms of the thermodynamic force which drives this component, consider the neoclassical component of the cross field particle flux. Using the parallel component of the steady state momentum balance equation in the j = 0 component of eq.(2.5-12), adding and subtracting $\langle I\rangle B/(I\langle B\rangle)$ times the resulting equation and rearranging yields [100,101]:

$$\Gamma_a^{nc} = \Gamma_a^{ps} + \Gamma_a^{Bp} \tag{2.5-14}$$

where

$$\Gamma_a^{ps} = -2\pi/(\gamma' e_a)\langle \hat{n}_{\parallel}/B\cdot(\vec{\nabla}p_a + m_a n_a \vec{u}_{aE}\cdot\vec{\nabla}\vec{u}_{aE} + e_a n_a \vec{\nabla}\Phi - \vec{\xi}_{a1})$$

$$(I - \langle I\rangle B^2/\langle B^2\rangle) \quad + \text{terms} \geq O(\delta^2)$$

(2.5-15)

is a modified Pfirsch-Schluter flux and

$$\Gamma_a^{Bp} = -2\pi\langle I\rangle/(\gamma' e_a\langle B^2\rangle)\langle \vec{B}\cdot(\vec{\nabla}\cdot\hat{\overleftrightarrow{\Pi}}_a + m_a n_a \vec{u}_{aE}\cdot\vec{\nabla}\vec{u}_{aE} + n_a e_a \vec{\nabla}\Phi -$$

$$\vec{\xi}_{a1})\rangle$$

(2.5-16)

is a modified banana-plateau flux. Here $\hat{\overleftrightarrow{\Pi}}_a$ denotes the component of the viscous stress tensor which arises from the gyrotropic component of the particle distribution function.

In the collisional regime the pressure stress anisotropy is kept small by collisional randomization but the mean free path is short enough to allow pressure and electrostatic potential variations along the magnetic field lines. Indeed in the weak rotation case where $\vec{\xi}_{a1}$ and $\vec{u}_{aE}:\vec{\nabla}\vec{u}_{aE}$ can be neglected, the poloidal gradients in the pressure and electrostatic potential are solely responsible for the Pfirsch-Schluter flux. However in a strongly rotating beam injected plasma the conventional Pfirsch-Schluter flux is now modified by the beam and beam induced inertial and drag forces.

In the long mean free path regime the effective collisional scattering rate of trapped particles is less

than the trapped particle bounce frequency so that some of the particles become trapped in collisionless banana orbits. As a result the shear for the particle viscosity is increased and the pressure stress anisotropies dominate the flux mechanism. The neoclassical particle fluxes in this regime are therefore governed by eq.(2.5-16), the banana-plateau flux. In the weak rotation case the banana-plateau flux is driven solely by viscous anisotropies which are obtained from the gyrotropic component of f_a and therefore can be adequately represented by the CGL approximation [102]. However in a strongly rotating plasma the conventional banana-plateau flux is modified by an inertial term, a pure momentum input term and a dissipative shear force which results from a gyroviscous momentum transfer. A similar analysis can be carried out for the cross field component of the heat flux to show that both the conventional Pfirsch-Schluter and the banana-plateau fluxes are modified by the beam and beam induced forces.

It is noteworthy that the net external momentum input term $\vec{\xi}_{a1}$ appears in both the Pfirsch-Schluter and banana-plateau components of the neoclassical cross field flux. This is quite reasonable since when dealing with parallel momentum injection, the pure momentum input portion of $\vec{\xi}_{a1}$ is present in the neoclassical component of Γ_a^{ψ} any time unbalanced beam injection occurs. The lowest order drag component of $\vec{\xi}_{a1}$ is obtained from the gyroangle com-

ponent of f_a and is independent of the collision frequency. As a result, the viscous drag component will always be present any time unbalanced beam injection occurs.

Finally eq.(2.5-13) represents the direct contribution to the cross field particle and heat fluxes from the beam and beam induced forces. Physically eq.(2.5-13) implies that the cross field particle and heat transport fluxes are partially driven by torques due to the toroidal components of the beam and beam induced viscous dissipative forces when unbalanced beam injection is present.

Since the collisional friction and external momentum source operators depend on the lowest order particle and heat flows, a detailed knowledge of the functional form of these flows will be required to complete the formulation of the cross field particle and heat fluxes. To obtain the functional structure of the particle flow, eq.(2.2-50) can be integrated over all velocity space to give

$$\vec{B}\cdot\vec{\nabla}[\int_{\vec{V}} V_{\parallel}/B(\hat{f}_{a1}/F_a + 2\pi/\gamma'[I/\Omega_a(\hat{n}_{\parallel}\cdot[\vec{V} + \vec{u}_E^{(0)}])\partial \ln F_a/\partial\psi + m_a/e_a(I\hat{n}_{\parallel}\cdot[\vec{V} + \vec{u}_E^{(0)}]/(v_{ta}B))^2\partial(R^{-1}\vec{u}_E^{(0)}\cdot\hat{n}_{\phi})/\partial\psi] - 2e_a\Phi_0(\chi,\psi)/(m_a v_{ta}^2))F_a d^3V] = 0 \tag{2.5-17a}$$

Note that in obtaining the above expression it has been assumed that to this order approximation the external source

of beam particles can be neglected since, $n_B/n_a << 1$. Likewise, multiplying eq.(2.2-50) by H and integrating over all energy space yields

$$\vec{B}\cdot\vec{\nabla}[\int_{\vec{V}}(\hat{f}_{a1}/F_a + 2\pi/\gamma'[I/\Omega_a(\hat{n}_{\parallel}\cdot[\vec{V} + \vec{u}_E^{(0)}])\partial \ln F_a/\partial\psi + m_a/e_a (I\hat{n}_{\parallel}\cdot[\vec{V} + \vec{u}_E^{(0)}]/(v_{ta}B))^2\partial(R^{-1}\vec{u}_E^{(0)}\cdot\hat{n}_{\phi})/\partial\psi] - 2e_a\Phi_0(\chi,\psi)/(m_a v_{ta}^2))2\pi F_a H dH d\mu] = 0 \tag{2.5-17b}$$

where here the heat generation rate due to collisional interactions has been neglected since the $O(\delta^1)$ collisionless heat flow is desired. The integro-differential equations for the particle and the heat flows can be combined into a single integro-differential equation of the general form:

$$\vec{B}\cdot\vec{\nabla}[\int_{\vec{V}}V_{\parallel}/B(\hat{f}_{a1}/F_a + 2\pi I/(\gamma'\Omega_a)[V_{\parallel}\partial \ln F_a/\partial\psi + 2V_{\parallel}/v_{ta}^2(I\hat{n}_{\parallel}\cdot\vec{u}_E^{(0)}) /B\partial(R^{-1}\vec{u}_E^{(0)}\cdot\hat{n}_{\phi})/\partial\psi)T_a^j L_j^{-3/2}(x_a^2)F_a d^3V] = 0 \ . \tag{2.5-18}$$

Althought it has been assumed that the $O(\delta^1)$ particle and heat flows are incompressible, the presence of an external source of momentum will be accounted for in that the poloidal variations in the density and electrostatic potential over a flux surface and the radial gradient of the

centrifugal potential will be retained when evaluating the collisionless particle and heat flows. Equation (2.5-18) can be solved directly by integration to give the $O(\delta^1)$ parallel component of the hydrodynamic flows

$$\vec{U}_{\parallel alj} = U^{\chi}_{alj}(\psi)\vec{B}/n_a^{(1-j)} + U^{\chi}_{\perp alj}\hat{n}_{\parallel} \tag{2.5-19}$$

where

$$U^{\chi}_{alj} = \vec{U}_{alj}\cdot\hat{e}_{\chi}/(\vec{B}\cdot\hat{e}_{\chi}) = (2\pi/\gamma')(2/(5p_a))^j\kappa_{aj}(\psi) \tag{2.5-20}$$

is a surface function which arises from the constant of integration and

$$U^{\chi}_{\perp alj} = \vec{U}_{\perp alj}\cdot\hat{e}_{\chi}/(\hat{n}_{\parallel}\cdot\hat{e}_{\chi}) = -2\pi I/(\gamma' e_a n_a B)[(\partial p_a/\partial\psi + e_a n_a[\partial \Phi_0(\chi,\psi)/\partial\psi + m_e/e_a(\partial(R^2\omega_{-1}^2(\psi)/2)/\partial\psi - \omega_{-1}(\psi)\partial(R^2\omega_{-1}(\psi))/\partial\psi)])\delta_{j,0} + (n_a\partial T_a/\partial\psi)\delta_{j,1}] \tag{2.5-21}$$

is associated with the poloidal component of the diamagnetic hydrodynamic flows. The perpendicular component of the $O(\delta^1)$ hydrodynamic flows can be obtained by selecting the $(2/5)^j\vec{V}_{\perp}\bar{L}_j^{3/2}(x_a^2)/n_a$ moment of eq.(2.2-49) to give

$$\vec{U}_{\perp alj} = (2/5)^j\int_{\vec{V}}\vec{V}_{\perp}\bar{L}_j^{3/2}(x_a^2)\tilde{f}_a d^3V/n_a = (\hat{n}_{\parallel}\times\hat{e}_{\psi})/(e_a n_a B)[(\partial p_a/\partial\psi +$$

$$e_a n_a[\partial\Phi_0(\chi,\psi)/\partial\psi + m_a/e_a(\partial(R^2\omega_{-1}^2(\psi)/2)/\partial\psi - \omega_{-1}^2(\psi)\partial(R^2\omega_{-1}(\psi)$$

$$)/\partial\psi)])\delta_{j,0} + (n_a\partial T_a/\partial\psi)\delta_{j,1}] = (U_{\perp alj}^{\chi}B/I)R^2\hat{e}_\phi - U_{\perp alj}^{\chi}\hat{n}_\parallel \ . \tag{2.5-22}$$

Therefore upon combining eq. (2.5-19) and (2.5-22) yields the desired result, namely

$$\vec{U}_{alj} = U_{alj}^{\chi}(\psi)B/n_a^{(1-j)} + (U_{\perp alj}^{\chi}B/I)R^2\hat{e}_\phi \ . \tag{2.5-23}$$

To obtain an expression for the lowest order beam particle flows, it is more convenient to use the fluid equations. In particular since $\delta P_B = P_\parallel - P_\perp \sim O(\delta^0)$ for the beam injected species [103], then the lowest order beam particle flows will exhibit pressure anisotropy effects. Proceeding in the usual manner [17], the lowest order beam particle continuity equation can be integrated to give

$$n_B\vec{v}_B\cdot\hat{e}_\chi = \partial(\delta I)/\partial\psi + \kappa_B(\psi) \tag{2.5-24}$$

where the function

$$\delta I = \mu_0 I\delta P_B/B^2 \tag{2.5-25}$$

results from the cross field component of the lowest order particle flow and $\kappa_a(\psi)$ is a surface function which arises as a constant of integration. Utilizing the lowest

order perpendicular component of the beam momentum balance equation yields

$$n_B\vec{v}_{\perp B} = -n_B V_B^{\chi}\hat{n}_{\parallel} + (n_B V_B^{\chi} B/I) R^2 \hat{e}_{\phi} + n_a V_B^{\psi}\hat{e}_{\chi} \times \hat{e}_{\phi} \tag{2.5-26}$$

consequently

$$n_B\vec{v}_{\parallel B} = (\vec{v}_B - \vec{v}_{\perp B})\cdot\hat{e}_{\chi}/(\hat{e}_{\chi}\cdot\hat{n}_{\parallel}) = (U_B^{\chi}(\psi) + U_B^{\psi}(\chi,\psi))B + n_B V_B^{\chi} \tag{2.5-27}$$

where the functions $U_B^{\chi}(\psi)$ and $U_B^{\psi}(\chi,\psi)$ are defined such that

$$U_B^{\chi}(\psi) = \vec{v}_B\cdot\hat{e}_{\chi}/(\vec{B}\cdot\hat{e}_{\chi}) = 2\pi\kappa_B(\psi)/\gamma' \tag{2.5-28}$$

$$U_B^{\psi}(\chi,\psi) = -2\pi/(\gamma'\mu_0 e_B)\partial(\delta I)/\partial\psi \tag{2.5-29}$$

respectively,

$$V_B^{\chi} = -2\pi I/(\gamma'\tau e_B n_B B)[(\partial P_{+B}/\partial\psi + \delta P_B/B\partial B/\partial\psi) + ([1 - \tau]\partial p/\partial\psi + e_B n_B \tau\partial\Phi/\partial\psi)] \tag{2.5-30}$$

is associated with the poloidal component of the diamagnetic beam particle flow,

$$\tau = 1 - \mu_0\delta P_B/B^2 \tag{2.5-31}$$

and

$$V_B^{\psi} = 2\pi\sqrt{g}/(\gamma'\mu_0 e_B n_B)\vec{B}\cdot\vec{\nabla}I \tag{2.5-32}$$

is the lowest order cross field component of $\vec{v}_B$. Finally combining eqs.(2.5-44) and (2.5-45) yields the lowest order beam flow

$$n_B\vec{v}_B = (U_B^{\chi}(\psi) + U_B^{\psi}(\chi,\psi))\vec{B} + (n_B V_B^{\chi} B/I)R^2\hat{e}_{\phi} + n_B V_B^{\psi}\hat{e}_{\chi} \times \hat{e}_{\phi} \ . \tag{2.5-33}$$

With the functional structure of the fluid moment equations and the hydrodynamic and beam flows formally established, the fluid approach to transport theory becomes apparent. In particular eqs.(2.5-1) through (2.5-13) represent closed form expressions for the radial fluxes in terms of the collisional and heat friction operators, and the net external momentum and energy flux source terms. These driving forces are in turn related to the hydrodynamic and beam flows by the friction-flow constitutive relationships. Therefore once the surface functions U_{a10}^{χ}, U_{a11}^{χ} and U_B^{χ} are eliminated from the expressions for the hydrodynamic and beam flows, then the radial fluxes can be expressed in the desired form, namely in terms of the radial gradients of the thermodynamic driving forces and electrostatic potential. In this regard, the parallel component of the momentum and heat balance equations can be

used in conjunction with the parallel viscosity constitutive relationships to eliminate the surface functions. Finally by requiring that the radial fluxes be ambipolar, then the electrostatic potential can be eliminated from the final expression for the cross field fluxes.

CHAPTER III

GENERAL SOLUTION TO THE $O(\delta^1)$ DRIFT KINETIC EQUATION FOR A STRONGLY ROTATING BEAM INJECTED PLASMA

3.1 INTRODUCTION

The primary objective of transport theory is to express the radial component of the particle, momentum and heat fluxes in terms of the thermodynamic forces. To accomplish this task, the fluid formalism is used to express the radial particle, momentum and heat fluxes in terms of the collisional friction, heat friction, external momentum and energy flux operators. Next, the friction-flow constitutive relationships are used to provide the necessary closure relationships to express these operators in terms of the hydrodynamic and beam flows. Consequently, once the flows are completely quantified in terms of the thermodynamic forces, then the radial fluxes can be functionally specified in the desired form. In this regard, the fluid theory can provide expressions for the hydrodynamic and beam flows in terms of the radial gradient of the thermodynamic forces and electrostatic potential to within arbitrary surface functions. By employing kinetically derived constitutive relationships, which relate the viscous and energy stress forces to the hydrodynamic and beam flows, in conjunction with the parallel component of the momentum and heat balance

equations, the surface functions can be expressed in terms of the radial gradients of the electrostatic potential, pressure and temperature. As a result, the surface functions can be eliminated from the expressions for the particle, heat and beam flows. In this chapter the kinetic equations, which govern the behavior of the particle distribution function for a strongly rotating momentum injected plasma, are solved in all collisional frequency regimes and the resulting particle distribution functions are used to develop friction-flow and viscous stress constitutive relationships.

In section 3.2 of this chapter, the $O(\delta^1)$ drift kinetic equation is solved in the collisional regime. A perturbation method, which is similar in nature to the Chapman-Enskog method [72] of kinetic theory for gases, is used to obtain the general functional structure of the $O(\delta^1)$ particle distribution function. In essence, the analysis is carried out in a coordinate frame which is moving with the plasma, where the distribution function is expanded in powers of $\Delta_a = \omega_{ta}/\eta_a << 1$, with ω_{ta} being the transit frequency of the (a) species particle around the magnetic axis and η_a is the collision frequency. The $O(\delta^1\Delta_a^{-1})$ solution describes the collisional relaxation of the (a) species to a local Maxwellian, whereas the $O(\delta^1\Delta_a^0)$ and $O(\delta^1\Delta_a^1)$ solutions describe the diffusive random walk motion of the (a) species in the rotating frame due to the

free streaming motion of the guiding center and the radial motion of the particle guiding center resulting from the gradients and curvature of the magnetic field, the fictitious forces (centrifugal and coriolis forces), and the interspecies and beam particle collisional effects. To facilitate the calculations to be carried out in section 2.5 of this chapter, the $O(\delta^1\Delta_a^0)$ solution to the drift kinetic equation is expressed in terms of the hydrodynamic flows and a distortion function which account for the field response to momentum exchange effects with the background and beam particles.

In the next section of this chapter, the drift kinetic equation is solved for the first order perturbation to the particle distribution function in the long mean free path regime. Since the collisional frequency is small compared to the bounce frequency for trapped particles in this regime, the $O(\delta^1)$ particle distribution function is expanded in powers of $\gamma_a = \eta_a/\omega_{ta} << 1$. The $O(\delta^1\gamma_a^0)$ solution is obtained in the conventional manner [22,30-35], with the notable exception that the radial drift of the guiding center is driven by fictitious forces as well as the gradient and curvature of the magnetic field lines. One novel feature of this analysis is the inclusion of the trapping effects due to the effective electrostatic potential. In essence it is shown that the conventional magnetic trapping boundaries can be significantly modified

by the presence of a poloidally varying effective electrostatic potential. The interspecie and beam particle collisional effects, which are treated as a perturbation to the particle's orbital motion in the banana regime, are obtained by averaging over a bounce or transit period (for a trapped or untrapped particle) and requiring that the distribution function be single valued. Like in the analysis carried out in section 3.2 for the collisional regime, the solution to the $O(\delta^1\Delta_a^0)$ kinetic equation in this regime is expressed in terms of the hydrodynamic flows and a distortion function.

In section 3.4, the $O(\delta^1)$ drift kinetic equation is solved for the plateau regime particle distribution function. In this regime, trapped particles no longer persist and the well untrapped particles are nearly collisionless. Consequently the diffusion process is governed by the resonant region of velocity space [36-39]. As a result, the solution to the kinetic equation is obtained in a manner consistent with conventional techniques [36-39] in that an asymptotic expansion of the particle distribution function is made in terms of the small mirroring force along the magnetic field. In addition, there is a small perturbation due to the effective electrostatic field which must be accounted for when $v_\phi \sim v_{ta}$. Consequently, both the mirror force and the effective electrostatic potential produce small modulations in the parallel velocity

of the resonant particles. In this analysis, the effects of strong rotation and radial viscous transfer are accounted for by employing a shifted velocity coordinate frame which is characterized by poloidal variations. This analysis also encompasses those resonant particles which arise from electrostatic and centrifugal potential well detrapping effects. Finally, the background field and beam particle collisional momentum exchange effects are incorporated explicitly into the computation of the plateau regime distribution function.

In section 3.5 of this chapter, the results obtained previously for the particle distribution function are used in conjuction with moments of the collision operator and the definition of the parallel stress forces to develop friction-flow and parallel stress constitutive relationships for a strongly rotating beam injected plasma. Since the $\ell = 1$ harmonic component of the particle distribution functions is expressed in terms of a component which is a function of the hydrodynamic flow and a component which encompasses distortion effects due to beam and beam induced collisional interactions, then the resulting friction-flow constitutive relationships are cast into a form which are similar to that obtained in the slow rotation limit [8,104], and therefore are amenable for use in the fluid formulism. It is shown that the lowest order version of the friction -flow relationships are characterized by components which

possess poloidal variations, a result which is characteristic of a strongly rotating beam injected plasma. In addition, since the beam ions themselves are collisionally coupled to the background plasma particles, then the functional structure of the parallel friction-flow constitutive relationships are modified so that they posses an explicit beam flow contribution. Finally, the friction-flow constitutive relationships are determined for the beam particles themselves by selecting moments of the beam momentum and energy source terms.

In the last part of this section, the functional expressions for the $\ell = 2$ harmonic component of the particle distribution function is used to develop constitutive relationships for the viscous and energy stress tensors, and the beam viscous stress tensor. In particular since the parallel viscous stress constitutive relationships are linearly dependent on the spatial gradients the $O(\delta^1)$ hydrodynamic flows, the lowest order version of these constitutive relationships will possess poloidal variations. Furthermore, the parallel viscosity coefficients themselves possess poloidal variations as well as exhibiting a functional characteristic which reflects the field response of the ion species to the collisional momentum exchange with the energetic beam ions. In addition the gyroangle dependent component of the particle distribution function is used in conjuction with the definition of the parallel

stress force to develop closure relationships which characterize the effects of strong radial gyroviscous momentum transfer. Finally, parallel viscosity constitutive relationships are developed for the energetic beam ions.

3.2 KINETIC DERIVATION OF THE ION DISTRIBUTION FUNCTION IN THE PFIRSCH-SCHLUTER REGIME FOR A STRONGLY ROTATING BEAM INJECTED PLASMA

In the Pfirsch-Schluter regime, the particle collision scattering rate is much greater than bounce or transit frequency. As a result, these particles have their orbital effects dominated by collisional momentum and heat exchange effects with the background plasma and beam particles. In essence, free particle motion occurs on the short time scale of the gyroperoid, therefore after a time τ_a , before the particle has transversed an appreciable distance along the magnetic field line about which it is gyrating, the particle magnetic moment and energy will have diffused sufficiently for an effective scattering [23,24,25,27].

To obtain a solution to the $O(\delta^1)$ drift kinetic equation in the collisional regime, the particle distribution function is expanded [105,106] in powers of $\Delta_a = \omega_{ta}/\eta_a << 1$, where ω_{ta} and η_a are the particle transit and collision frequencies respectively:

$$\hat{f}_{a1} = \hat{g}_{a(-1)} + \hat{g}_{a(0)} + \hat{g}_{a(1)} + \cdots + \hat{g}_{a(n)} + \cdots \tag{3.2-1}$$

with $\hat{g}_{a(n)} \sim O(\delta^1 \Delta_a^n)$. Insertion of eq.(3.2-1) into (2.2-50) yields the following hierarchy of steady state kinetic equations:

$$O(\delta^1\Delta^{-1}): \quad \sum_b C_{ab}(\hat{g}_{a(-1)},\hat{g}_{b(-1)}) = 0 \tag{3.2-2}$$

$$O(\delta^1\Delta^0): \quad \vec{V}_{\parallel}\cdot\vec{\nabla}(\hat{g}_{a(-1)} - 2e_a\Phi_1F_a/(m_av_{ta}^2)) = \sum_b C_{ab}(\hat{g}_{a(0)},\hat{g}_{b(0)}) + S_{aB}(F_a,f_B) \tag{3.2-3}$$

$$O(\delta^1\Delta^1): \quad \vec{V}_{\parallel}\cdot\vec{\nabla}(\hat{g}_{a(0)} + 2\pi I\hat{n}_{\parallel}\cdot[\vec{V} + \vec{u}_E^{(0)}]/(\gamma'\Omega_a)\partial\ln F_a/\partial\psi + 2\pi m_a/(\gamma' e_a v_{ta}^2)(I\hat{n}_{\parallel}\cdot[\vec{V} + \vec{u}_E^{(0)}]/B)^2\partial(R^{-1}\vec{u}_E^{(0)}\cdot\hat{n}_{\phi})/\partial\psi)F_a = \sum_b C_{ab}(\hat{g}_{a(1)},\hat{g}_{b(1)}) + S_{aB}(F_a,f_B) \tag{3.2-4}$$

etc.

Physically, eq.(3.2.2) describes the collisional relaxation of the (a) species to a local Maxwellian. As a result, the general solution to this equation is a distorted Maxwellian due to pressure, flow and temperature perturbations [107]

$$\hat{g}_{a(-1)} = [(p_{a1}^{(-1)}/p_{a0}) + 2\vec{V}_{\parallel}\cdot\vec{V}_{a1}^{(-1)}/v_{ta}^2 + (T_{a1}^{(-1)}/T_{a0})\bar{L}_1^{3/2}(x_a^2)]F_a \tag{3.2-5}$$

where

$$\bar{L}_j^{3/2}(x_a^2) = (\delta_{j,0} - L_j^{3/2}(x_a^2)\delta_{j,1}) \tag{3.2-6}$$

for j = 0,1 and

$$x_a^2 = (V/v_{ta})^2 \tag{3.2-7}$$

and the functions $p_{a1}^{(-1)}$, $V_{\parallel a1}^{(-1)}$ and $T_{a1}^{(-1)}$ will be determined from velocity moments of the higher order kinetic equations. Integrating eq.(3.2-3) over all velocity space yields

$$\vec{B}\cdot\vec{\nabla}\left(\int_{\vec{V}} V_{\parallel}\hat{g}_{a(-1)}d^3V/B\right) = S_{a0} \tag{3.2-8}$$

which is a statement of the particle continuity equation. Since $n_B/n_a << 1$ for most present generation beam injected tokamaks, then to the lowest order approximation the external source of particles can be neglected. As a result, the poloidal component of the $O(\delta^1\Delta_a^{-1})$ parallel particle flux is incompressible, i.e.

$$\vec{\nabla}\cdot\vec{\Gamma}_{\parallel a1}^{(-1)} = 0 \tag{3.2-9}$$

where $\vec{\Gamma}_{\parallel a1}^{(-1)} = n_a\vec{V}_{\parallel a1}^{(-1)} = \int_{\vec{V}} \vec{V}_{\parallel}\hat{g}_{a(-1)}d^3V$ is the $O(\delta^1\Delta_a^{-1})$ parallel particle flux in the frame moving with the plasma and $\kappa_a^{(-1)}(\psi)$ is the constant of integration. In view of eq.(3.2-9)

$$\vec{V}_{\parallel a1}^{(-1)} = U_{a10}^{\chi(-1)}(\psi)\vec{B}/n_a \tag{3.2-10}$$

where $U_{a10}^{\chi(-1)}(\psi) = 2\pi\kappa_a^{(-1)}(\psi)/\gamma'$ is a surface function which arises as a constant of integration. Here the flow $\vec{V}_{\parallel a1}^{(-1)}$ represents the $O(\delta^1\Delta_a^{-1})$ lowest order perturbation

to the bulk parallel mass flow in the frame moving with the plasma.

The next higher order kinetic equation describes the diffusive random walk motion of species (a) along the magnetic fields lines in the rotating frame. Combining eqs(3.2-5) and (3.2-10) with (3.2-3) yields

$$-2\vec{V}_{\parallel}/v_{ta}^2\cdot\sum_K^1[\vec{A}_{aK}\bar{L}_j^{3/2}(x_a^2) - V^2P_{(K+1)}(V_{\parallel}/V)U_{a10}^{\chi(-1)}(\psi)(\hat{n}_{\parallel}\cdot\vec{\nabla}B)$$

$$\delta_{K,1}\hat{n}_{\parallel}/(n_aV_{\parallel})]F_a = \sum_b C_{ab}(\hat{g}_{a(0)},\hat{g}_{b(0)}) + S_{aB}(F_a,f_B) + 2x_a^2[$$

$$P_1^2(V_{\parallel}/V)U_{a10}^{\chi(-1)}(\psi)\vec{B}/n_a\cdot(\vec{\nabla}\ln n_a + e_a/m_a(V/V_{\parallel})^2\vec{\nabla}\hat{\Phi}_0)]F_a$$

(3.2-11)

where in obtaining the above expression terms $> O(\delta^1)$ have been neglected and the generalized driving forces $\vec{A}_{aj}$ for $j = 0,1$ have been defined such that

$$\vec{A}_{a0} = -v_{ta}^2/2[\vec{\nabla}(p_{a1}^{(-1)}/p_{a0}) - e_a\vec{\nabla}\Phi_1/T_{a0} - e_a(T_{a1}^{(-1)}/T_{a0})\vec{\nabla}\hat{\Phi}_0/T_{a0}]$$

(3.2-12)

and

$$\vec{A}_{a1} = -v_{ta}^2\vec{\nabla}(T_{a1}^{(-1)}/T_{a0})/2$$

(3.2-13)

respectively and the effective electrostatic potential has been defined such that

$$\hat{\Phi}_0(\chi,\psi) = \Phi_0(\chi,\psi) - m_a u_E^{(0)^2}/(2e_a) \,. \tag{3.2-14}$$

A solution to eq.(3.2-11) can be obtained by observing that the driving terms on the L.H.S. of this equation can be associated with either the $\ell = 1$ or $\ell = 2$ harmonic components of the collision operator. As a result eq.(3.2-11) can be decomposed into its respective harmonic constituents:

$$\ell = 1: \quad -2\vec{V}_{\parallel}/v_{ta}^2 \cdot \sum_K^1 \vec{A}_{aK} \bar{L}_K^{3/2}(x_a^2) F_a = \sum_b C_{ab}^{(1)}(\hat{g}_{a(0)}^{(1)}, \hat{g}_{b(0)}^{(1)}) + S_{aB}^{(1)}(F_a, f_B) \tag{3.2-15}$$

$$\ell = 2: \quad 2x_a^2 P_2(V_{\parallel}/V) U_{a10}^{\chi(-1)}(\psi)(\hat{n}_{\parallel}\cdot\vec{\nabla}B) F_a/n_a = \sum_b C_{ab}^{(2)}(\hat{g}_{a(0)}^{(2)}, \hat{g}_{b(0)}^{(2)}) + S_{aB}^{(2)}(F_a, f_B^{(2)}) + 2x_a^2[P_1^2(V_{\parallel}/V) U_{a10}^{\chi(-1)}(\psi)\vec{B}\cdot(\vec{\nabla}\ln n_a + e_a/m_a(V/V_{\parallel})^2\vec{\nabla}\hat{\Phi}_0)] F_a/n_a \,. \tag{3.2-16}$$

Now with respect to eq.(3.2-15), the results of section 2.3 can be used to express the $\ell = 1$ harmonic component of the collision operator and external momentum source term as follows:

$$\sum_b C_{ab}^{(1)}(\hat{g}_{a(0)}^{(1)}, \hat{g}_{b(0)}^{(1)}) = -\eta_a^s \hat{g}_{a(0)}^{(1)} + 2\vec{V}_{\parallel}/v_{ta}^2 \cdot \sum_b \vec{S}_{ab}^{(1)}(V) F_a \tag{3.2-17}$$

and

$$S_{aB}^{(1)}(F_a, f_B^{(1)}) = 2\vec{V}_{\parallel}\cdot\vec{S}_{aB}^{(1)}(V)F_a/v_{ta}^2 \tag{3.2-18}$$

for $v_{ta}/v_B << 1$, where

$$\eta_a^s = \sum_b \eta_{ab}^s \tag{3.2-19}$$

is the total slowing down frequency and

$$\vec{S}_{ab}^{(1)}(V) = \eta_{ab}^s c_{ab}^s \vec{R}_{(a0,b1)_1} + (\eta_{ab}^Q c_{ab}^Q \vec{R}_{(a0,b1)_3} + \eta_{ab}^K c_{ab}^K \vec{R}_{(a1,b0)_3})x_a^2 \tag{3.2-20}$$

is a global function of velocity which represents the background plasma (excluding beam particles) response to the collisional momentum exchange effects of the (a) species. Here, $\vec{R}_{(a0,b1)_1}$, $\vec{R}_{(a0,b1)_3}$, $\vec{R}_{(a1,b0)_3}$ are the field restoring coefficients, and η_{ab}^s, η_{ab}^Q and η_{ab}^K are characteristic slowing down and energy exchange frequencies, the definitions of which can be found in section 2.3 of chapter II. Likewise

$$\vec{S}_{aB}^{(1)}(V) = \gamma_{aB}^s(V)\vec{V}_B \tag{3.2-21}$$

is a velocity function which characterizes the response of

the background plasma to collisional momentum exchange with the beam particles. Combining eqs.(3.2-17) and (3.2-18) with eq.(3.2-15) and solving for $\hat{g}^{(1)}_{a(0)}$ yields the general solution

$$\hat{g}^{(1)}_{a(0)} = 2\vec{V}_{\parallel}/v^2_{ta}\cdot\sum_j^1 \vec{A}_{aj}\bar{L}_j^{3/2}(x_a^2)F_a/n_a^s + 2\vec{V}_{\parallel}/v^2_{ta}\cdot\sum_b(\vec{S}^{(1)}_{ab}(V) + \vec{S}^{(1)}_{aB}(V))F_a/n_a^s \quad . \tag{3.2-22}$$

In essence the above expression indicates that to this order approximation the perturbations in the particle distribution function are due to poloidal gradients in the pressure, temperature, and effective electrostatic potential as well as collisional momentum exchange with the other plasma species and the beam ions.

The solution to the $\ell = 1$ harmonic component of the $O(\delta^1\Delta_a^0)$ drift kinetic equation in the collisional regime can be expressed in a more natural form for transport calculations by expressing the generalized driving forces in terms of the parallel hydrodynamic and beam flows. To functionally quantify eq.(3.2-22) in terms of the hydrodynamic and beam flows as seen by an observer in the rotating frame, the $V_{\parallel}\bar{L}_j^{3/2}(x_a^2)/(n_a\{[\bar{L}_j^{3/2}]^2\})$ moments of eq.(3.2-22) for $j = 0,1$ can be selected and the result solved for the driving forces in terms of the parallel flows to give

$$A_{aj} = \sum_\ell^1[U_{\parallel a1\ell}\delta_{\ell,j} - \{\bar{L}_1^{3/2}(x_a^2)/\hat{n}_a^s\}(\delta_{j,0}\delta_{\ell,1} + \delta_{j,1}\delta_{\ell,0})$$

$$(U_{\parallel a1\ell} - \sum_b \{\hat{n}_\parallel \cdot (\vec{S}^{(1)}_{ab}(V) + \vec{S}^{(1)}_{aB}(V))\bar{L}^{3/2}_\ell(x^2_a)/\hat{\eta}^s_a\})/(\{[\bar{L}^{3/2}_\ell(x^2_a)]^2$$

$$/\hat{\eta}^s_a\}) - \sum_b \{\hat{n}_\parallel \cdot (\vec{S}^{(1)}_{ab}(V) + \vec{S}^{(1)}_{aB}(V))\bar{L}^{3/2}_\ell(x^2_a)\delta_{\ell,j}/\hat{\eta}^s_a\}/((\{[\bar{L}^{3/2}_\ell(x^2_a)$$

$$]^2\delta_{\ell,j}/\hat{\eta}^s_a\})[(1 - \{\bar{L}^{3/2}_1(x^2_a)/\hat{\eta}^s_a\}^2/(\{1/\hat{\eta}^s_a\}\{[\bar{L}^{3/2}_1(x^2_a)]^2/\hat{\eta}^s_a\})]) . \tag{3.2-23}$$

Using eq.(3.2-23) in eq.(3.2-22) and rearranging the resulting expression yields the simplified solution

$$\hat{g}^{(1)}_{a(0)} = 2\vec{V}_\parallel/v^2_{ta} \cdot \sum_j^1 \vec{U}_{\parallel a1j}\bar{L}^{3/2}_j(x^2_a)F_a + \hat{g}^{*(1)}_a \tag{3.2-24}$$

where the distortion function $\hat{g}^{*(1)}_{a(0)}$ is defined such that

$$\hat{g}^{*(1)}_{a(0)} = 2\vec{V}_\parallel/v^2_{ta} \cdot \sum_j^1 \vec{U}_{\parallel a1j}C^c_{aj*}\bar{L}^{3/2}_j(x^2_a)F_a \tag{3.2-25}$$

Here

$$\vec{U}_{\parallel a1j} = \int_{\vec{V}} \vec{V}_\parallel \bar{L}^{3/2}_j(x^2_a)\hat{g}^{(1)}_{a(0)}d^3V/(n_a\{[\bar{L}^{3/2}_j]^2\}) \tag{3.2-26}$$

are the $O(\delta^1\Delta^0_a)$ parallel hydrodynamic flows in the frame moving with the plasma and C^c_{aj*} are the distortion coefficients defined such that

$$C^{c}_{aj^*} = \sum_{\ell}^{1}(1/\eta^s_a)[\delta_{\ell,j} - \eta^s_a\{[\bar{L}^{3/2}_{\ell}(x^2_a)]^2\delta_{\ell,j}/\hat{\eta}^s_a\}(1 - (\{\bar{L}^{3/2}_1(x^2_a)/\hat{\eta}^s_a\}^2$$

$$/(\{1/\hat{\eta}^s_a\}\{[\bar{L}^{3/2}_1(x^2_a)]^2/\hat{\eta}^s_a\}))) - (\{\bar{L}^{3/2}_1(x^2_a)/\hat{\eta}^s_a\}/\{[\bar{L}^{3/2}_{\ell}(x^2_a]^2/\hat{\eta}^s_a\})$$

$$(\delta_{j,0}\delta_{\ell,1} + \delta_{j,1}\delta_{\ell,0}) + (\sum_b\{\hat{n}_{\shortparallel}\cdot(\vec{S}^{(1)}_{ab}(V) + \vec{S}^{(1)}_{aB}(V))\bar{L}^{3/2}_{\ell}(x^2_a)/\hat{\eta}^s_a\})$$

$$((\{\bar{L}^{3/2}_1(x^2_a)/\hat{\eta}^s_a\}/\{[\bar{L}^{3/2}_{\ell}(x^2_a)]^2/\hat{\eta}^s_a\})(\delta_{j,0}\delta_{\ell,1} + \delta_{j,1}\delta_{\ell,0}) - \delta_{\ell,j})$$

$$/U_{\shortparallel a1\ell} + \{[\bar{L}^{3/2}_{\ell}(x^2_a)]^2\delta_{\ell,j}/\hat{\eta}^s_a\}(1 - (\{\bar{L}^{3/2}_1(x^2_a)/\hat{\eta}^s_a\}^2/(\{1/\hat{\eta}^s_a\}\{[\bar{L}^{3/2}_1$$

$$(x^2_a)]^2/\hat{\eta}^s_a\})))(\sum_b \hat{n}_{\shortparallel}\cdot(\vec{S}^{(1)}_{ab}(V) + \vec{S}^{(1)}_{aB}(V))/U_{\shortparallel a1\ell})]/[\{[\bar{L}^{3/2}_{\ell}(x^2_a)]^2$$

$$\delta_{\ell,j}/\hat{\eta}^s_a\}(1 - (\{\bar{L}^{3/2}_1(x^2_a)/\hat{\eta}^s_a\}^2/(\{1/\hat{\eta}^s_a\}\{[\bar{L}^{3/2}_1(x^2_a]^2/\hat{\eta}^s_a\})))]$$

(3.2-27)

where

$$\hat{\eta}^s_a = \eta^s_a/\{[\bar{L}^{3/2}_j(x^2_a)]^2\} \quad .$$

(3.2-28)

Note that if the distortion functions were neglected altogether, then eq.(3.2-24) would correspond exactly to the Grad thirteen moment approximation [108]. Furthermore in the slow rotation limit, $V_{\shortparallel B} \to 0$ and the coefficients $C^{c}_{aj^*}$ can be directly related to the matrix coefficients of the collision operator, where to a good approximation the restoring coefficients are degenerate in that they can be

expressed in terms of the fundamental moments of the field particle distribution function [106]. However with unbalanced beam injection the beam induced field distortion may be of such a magnitude that the collisional restoring moments of the field particle distribution function may have to be renormalized or weighted by their respective characteristic frequencies.

In a similar manner, eq.(3.2-16) can be solved for the $\ell = 2$ harmonic component of $\hat{g}_{a(0)}$. In particular, using the results from section 2.3 of the previous chapter, it follows that the $\ell = 2$ component of the collision operator and external source term can be expressed as follows:

$$C_{ab}^{(2)}(\hat{g}_{a(0)}^{(2)}, \hat{g}_{b(0)}^{(2)}) = -\eta_{ab}^{T}\hat{g}_{a(0)}^{(2)} + 2x_a^2[3/2(V_\parallel/V)^2\hat{n}_\parallel\hat{n}_\parallel - \overleftrightarrow{I}/2] : \overleftrightarrow{S}_{ab}^{(2)}(V)F_a \tag{3.2-29}$$

and

$$S_{aB}^{(2)}(F_a, f_B^{(2)}) = 2x_a^2[3/2(V_\parallel/V)^2\hat{n}_\parallel\hat{n}_\parallel - \overleftrightarrow{I}/2] : \overleftrightarrow{S}_{aB}^{(2)}(V)F_a \tag{3.2-30}$$

where

$$\overleftrightarrow{S}_{ab}^{(2)}(V) = 5\eta_{ab}^{p}c_{ab}^{p}\overleftrightarrow{R}(a0,b1)_2/(2v_{ta}^2) \tag{3.2-31}$$

is the field stress response to collisional interactions with the (a) species, and the functional structure of the characteristic frequencies η^T_{ab} and η^P_{ab} and the anisotropic stress restoring coefficient $\overleftrightarrow{R}_{(a0,b1)_2}$ are given in section 2.3 of Chapter II. Likewise

$$\overleftrightarrow{S}^{(2)}_{aB}(V) = \gamma^P_{aB}(V)\,\delta P_B \hat{V}\hat{V} \tag{3.2-32}$$

is the field stress response to collisional interactions with the beam particles. In view of eqs.(3.2-29) and (3.2-30), the general solution to eq.(3.2-16) is given by the following:

$$\hat{g}^{(2)}_{a(0)} = 2x^2_a P_2(V_\parallel/V)\,U^{\chi(-1)}_{a10}(\psi)\,A^{c*}_a(\hat{n}_\parallel\cdot\vec{\nabla}B)F_a/n_a + \hat{g}^{*(2)}_{a(0)} \tag{3.2-33}$$

where $A^{c*}_a = -1/\eta^T_a = -\tau^T_a$ and

$$\hat{g}^{*(2)}_{a(0)} = 2x^2_a P_2(V_\parallel/V)\,[(c^{P*}_{ab}\delta P_a + c^{P*}_{aB}\delta P_B) + (P^2_1(V_\parallel/V)\,U^{\chi(-1)}_{a10}(\psi)\,\vec{B}\cdot\vec{\nabla}\ln n_a/(\eta^T_a P_2(V_\parallel/V))]F_a/n_a \tag{3.2-34}$$

with the distortion coefficients c^{P*}_{ab} and c^{P*}_{aB} defined such that

$$c^{P*}_{ab} = \sum_b (n_a[3/2(V_\parallel/V)^2\hat{n}_\parallel\hat{n}_\parallel - \overleftrightarrow{I}/2]:\overleftrightarrow{S}^{(2)}_{ab}(V)/(\eta^T_a P_2(V_\parallel/V)\,\delta P_a)) \tag{3.2-35}$$

and

$$c_{aB}^{P*} = n_a \gamma_{aB}^{P}(V)/\eta_a^T \tag{3.2-36}$$

respectively. Note that in obtaining eq.(3.2-33) that all terms which do not contribute to the $x_a^2 P_2(V_\parallel/V)$ moment of $\hat{g}_{a(0)}^{(2)}$ have been neglected. It is noteworthy that if the distortion function were neglected then eq.(3.2-33) would reduce to the same result as that obtained by Braginskii [97] in the computation of the parallel component of the ion viscosity stress force. More specifically, selecting the $2m_i V^2 P_2(V_\parallel/V)/3$ moment of eq.(3.2-33) with $\hat{g}_{a(0)}^{*(2)} = 0$, integrating over all velocity space and flux surface averaging the result yields

$$\langle \vec{B}\cdot\vec{\nabla}\cdot\overleftrightarrow{\Pi}_i \rangle = -2\langle \mu_i U_{i10}^{\chi(-1)}(\psi)(\hat{n}_\parallel\cdot\vec{\nabla}B)^2/n_i \rangle \tag{3.2-37}$$

where here only ion-ion collisions have been considered (i.e. $\tau_i^T = \tau_{ii}^T$) and

$$\mu_i = 2p_i\{x_i^2/(\{x_i^2\}\eta_i^T)\} \approx 0.96 p_i \tau_i \tag{3.2-38}$$

with τ_i being the ion-ion collision time as defined by Braginskii [97].

In the $O(\delta^1\Delta_a^1)$ approximation the radial drift of the particle's guiding center, due to magnetic field inhomogenities and curvature, the electric field and the fictitious

forces (centrifugal and coriolis forces), perturbs the particle's free streaming motion along the magnetic field lines. Since this order approximation is only needed to compute the viscosity and energy stress constitutive relationships, only the lowest order $\ell = 2$ harmonic component of $\hat{g}_{a(1)}$ will be examined and all terms which do not contribute to the $x_a^2 P_2(V_\parallel/V)$ moment of $\hat{g}^{(2)}_{a(1)}$ will be neglected. In this regard eq.(3.2-24) can be combined with (3.2-4) and the result solved for the desired distribution function to give

$$\hat{g}^{(2)}_{a(1)} = 2x_a^2 P_2(V_\parallel/V)\sum_j^1 U^{\chi(0)}_{a1j}\bar{L}_j^{3/2}(x_a^2)A^{c_*}_{aj}(\hat{n}_\parallel\cdot\vec{\nabla}B)F_a/n_a^{(1-j)} + \hat{g}^{*(2)}_{a(1)} \tag{3.2-39}$$

where $A^{c_*}_{aj} = A^{c_*}_a = -1/\eta^T_a = -\tau^T_a$ and

$$\hat{g}^{*(2)}_{a(1)} = 2x_a^2 P_2(V_\parallel/V)\sum_j^1 [U_{\parallel a1j}\bar{L}_j^{3/2}(x_a^2)C^{c_*}_{aj}A^{c_*}_{aj}(\hat{n}_\parallel\cdot\vec{\nabla}B)n_a^{(1-j)}/B + n_a^{(1-j)}A^{c_*}_{aj}P_1^2(V_\parallel/V)\vec{B}\cdot\vec{\nabla}(U^{\chi}_{a1j}\bar{L}_j^{3/2}(x_a^2)/n_a^{(1-j)} + U_{\parallel a1j}\bar{L}_j^{3/2}(x_a^2)C^{c_*}_{aj}/B)/(P_2(V_\parallel/V)) + c^{p_*}_{ab}\delta P_a/(n_a)^j]F_a/n_a^{(1-j)} \tag{3.2-40}$$

Observe that in obtaining the above expression the results of section 2.3 have been utilized in formulating the $\ell = 2$

harmonic component of the collision operator, and smaller order terms, such as $C_{aB}^{(1)}(\hat{g}_{a(1)}^{(1)}, f_B^{(1)})$ have been neglected. Furthermore, if the beam induced distortion coefficients were set to zero, i.e. $C_{aj}^{c*} = c_{ab}^{p*} = 0$, then the resulting expression would reduce to the same result as that obtained by other authors [8].

Finally, the results of this section can be consolidated into a simple form by combining eqs.(3.2-24), (3.2-33) and (3.2-3) with eq.(3.2-1) to obtain:

$$\hat{f}_{a1} = \hat{f}_{a1}^{(1)} + \hat{f}_{a1}^{(2)}$$

$$\hat{f}_{a1}^{(1)} = \hat{g}_{a(0)}^{(1)} = 2\vec{V}_{\parallel}/v_{ta}^2 \cdot \sum_j^1 \vec{U}_{\parallel a1j} \bar{L}_j^{3/2}(x_a^2) F_a + \hat{g}_{a(0)}^{*(1)} \tag{3.2-41}$$

$$\hat{f}_{a1}^{(2)} = \hat{g}_{a(0)}^{(2)} + \hat{g}_{a(1)}^{(2)} = 2x_a^2 P_2(V_{\parallel}/V) \sum_j^1 U_{a1j}^{\chi} \bar{L}_j^{3/2}(x_a^2) A_{aj}^{c*}$$

$$(\hat{n}_{\parallel} \cdot \vec{\nabla} B) F_a / n_a^{(1-j)} + \hat{f}_{a1}^{*(2)} \tag{3.2-42}$$

with

$$U_{a1j}^{\chi} = U_{a1j}^{\chi(-1)} + U_{a1j}^{\chi(0)} \tag{3.2-43}$$

$$A_{aj}^{c*} = -1/\eta_a^T = -\tau_a^T \tag{3.2-44}$$

and

$$\hat{f}^{*(2)}_{a1} = \hat{g}^{*(2)}_{a(0)} + \hat{g}^{*(2)}_{a(1)} . \tag{3.2-45}$$

3.3 KINETIC THEORY DERIVATION OF THE PARTICLE DISTRIBUTION FUNCTION IN THE LONG MEAN FREE PATH REGIME FOR A STRONGLY ROTATING BEAM INJECTED PLASMA

In the banana regime the effective collisional scattering rate of trapped particles is less than the trapped particle bounce frequency so that some of the particles remain trapped in collisionless banana orbits [22,30,35]. In essence, the particle's parallel bounce motion in the magnetic well is slowly interrupted by pitch angle scattering into circulating space. As a result the effects of collisional interactions due to interspecies and beam particle collisional momentum exchange can be treated as a small perturbation to the particle's orbital motion in this regime. For a strongly rotating beam injected plasma, the particle bounce motion is considerably different from that characterizing a slowly rotating plasma in that the particles experience beam induced trapping effects resulting from the effective electrostatic potential. As a result, the conventional trapping boundary limits and fraction of trapped particles are significantly modified in comparison to the conventional values [60,70]. In this section, the steady state version of the $O(\delta^1)$ drift kinetic equation is solved in the banana regime for a strongly rotating beam injected plasma.

To solve the $O(\delta^1)$ drift kinetic equation in the long mean free path regime, the particle distribution function is expanded in powers of $\gamma_a = \eta_a/\omega_{ta} << 1$ where η_a is the collision frequency and $\omega_{ta} = v_{ta}/\ell_B$ is the bounce frequency (Here $\ell_B = \pi qR$ is the connection length):

$$\hat{f}_{a1} = \sum_K \hat{g}_{a(K)} = \hat{g}_{a(0)} + \hat{g}_{a(1)} + \cdots + \hat{g}_{a(n)} + \cdots \tag{3.3-1}$$

Using the expansion series for $\hat{f}_{a1}$ in eq.(2.2-50) yields the following hierarchy of kinetic equations:

$$O(\delta^1\gamma_a^0): \quad \vec{V}_{\parallel}\cdot\vec{\nabla}(\hat{g}_{a(0)} + 2\pi I\hat{n}_{\parallel}\cdot(\vec{V} + \vec{u}_E^{(0)})/(\gamma'\Omega_a)\partial F_a/\partial\psi + 2\pi m_a/(\gamma' e_a v_{ta}^2)(I\hat{n}_{\parallel}\cdot[\vec{V} + \vec{u}_E^{(0)}]/B)^2\partial(R^{-1}\vec{u}_E^{(0)}\cdot\hat{n}_\phi)/\partial\psi F_a = 0 \tag{3.3-2}$$

$$O(\delta^1\gamma_a^1): \quad \vec{V}_{\parallel}\cdot\vec{\nabla}[\hat{g}_{a(1)} - 2e_a\Phi_1 F_a/(m_a v_{ta}^2)] = \sum_b C_{ab}(\hat{g}_{a(0)},\hat{g}_{b(0)}) + S_{aB}(F_a, f_B) \ . \tag{3.3-3}$$

A solution to the $O(\delta^1\gamma_a^0)$ equation can be obtained directly by integration with the result:

$$\hat{g}_{a(0)} = 2\vec{V}_{\parallel}/v_{ta}^2\cdot\sum_j^1 U_{+a1j}^{\chi}\bar{L}_j^{3/2}(x_a^2)F_a\hat{n}_{\parallel} + U_a^{\chi *}F_a + \hat{h}_a(\psi) \tag{3.3-4}$$

where

$$U_a^{X*} = -2\pi/\gamma'(I\hat{n}_{\parallel}\cdot\vec{u}_E^{(0)}/\Omega_a\,\partial \ln F_a/\partial\psi + (m_a/e_a(I/B)^2(V_{\parallel}^2 + u_E^{(0)^2})/v_{ta}^2\,\partial(R^{-1}\vec{u}_E^{(0)}\cdot\hat{n}_\phi)/\partial\psi) \tag{3.3-5}$$

and $\hat{h}_a(\psi)$ is a surface function which arises from the constant of integration. In essence, the first term in eq.(3.3-4) represents the collisionless diamagnetic response of species (a) to its own gradients whereas the second term represents a distortion to the particle function which arises from the radial gradient in the angular frequency of rotation. The surface function $\hat{h}_a(\psi)$ describes the response of the (a) species to collisional momentum exchange with the background plasma species and the energetic beam ions.

To obtain an equation for the surface function $\hat{h}_a(\psi)$, the boundary conditions governing this function must first be specified. Now with intense plasma rotation the centrifugal forces pushes the ion species toroidally outward creating a higher electrostatic potential there. As a result the equilibrium effective electrostatic field may be as important as the magnetic field in establishing the particle trapping boundaries. To accomodate the magnetic and the effective electrostatic field trapping effects, the pitch angle variable λ is defined such that [60,70]

$$\lambda = \mu\langle B^2\rangle^{1/2}/H \tag{3.3-6}$$

where

$$H = (V^2 - u_E^{(0)2})/2 + m_a\Phi_0(\chi,\psi)/e_a \tag{3.3-7}$$

is the system Hamiltonian for a strongly rotating plasma. In view of the above definition, the magnetic well trapping boundary conditions become [60,70]:

$$\lambda \geq (\langle B^2\rangle^{1/2}/B)[1 - e_a/(m_a H)[\Phi_0(\chi,\psi) - m_a u_E^{(0)2}/(2e_a)]]|_{\chi=\pi}$$
$$= \lambda_c^B \tag{3.3-8}$$

where $\langle B^2\rangle^{1/2}$ is the magnetic strength at the magnetic axis. Note here that the poloidally varying electrostatic field and centrifugal potential have a definite effect on the magnetic trapping boundaries. In particular as the particle's kinetic energy decreases in comparison to the effective electrostatic potential then $\lambda_c^B \to 0$ implying that the particle is trapped for any pitch angle. At the other extreme where $V^2 >> 2e_a/m_a(\Phi_0(\chi,\psi) - m_a u_E^{(0)2}/(2e_a))$ then $\lambda_c^B \to \langle B^2\rangle^{1/2}/B|_{\chi=\pi}$ which corresponds to the conventional (energy independent) result [22]. Furthermore as the angular frequency of rotation increases or $e_a\Phi_0(\chi,\psi)/m_a < 0$

on the inside of the torus ($\chi = \pi$), then the trapping region gets smaller resulting in particle detrapping.

Another trapping condition which can arise in a strongly rotating beam injected plasma occurs when the effective potential is greater on the outside of the torus than on the inside [60,70]. Under these conditions trapping occurs on the inside of the toroidal cross section where

$$(\Phi_0(\chi,\psi) - m_a u_E^{(0)2}/(2e_a))|_{\chi=0} > (\Phi_0(\chi,\psi) - m_a u_E^{(0)2}/(2e_a))|_{\chi=\pi} \tag{3.3-9}$$

leading to the trapping condition [60,70]

$$\lambda \geq (\langle B^2\rangle^{1/2}/B)[1 - e_a/(m_a H)[\Phi_0(\chi,\psi) - m_a u_E^{(0)2}/(2e_a)]]|_{\chi=0} = \lambda_c^{\Phi} \quad . \tag{3.3-10}$$

Note here that as the kinetic energy of the particle increases $\lambda_c^{\Phi} \rightarrow \langle B^2\rangle^{1/2}/B(\chi,\psi)|_{\chi=0}$ corresponding to the conventional magnetic trapping minimum field reflection limit [22,23]. Conversely as the kinetic energy of the particle decreases $\lambda_c^{\Phi} \rightarrow 0$ implying that the particles are trapped in the effective potential well regardless of the magnitude of the pitch angle.

In summary, two distinct particle trapping mechanisms are responsible for the trapped particle population in the long mean free path regime of a strongly rotating beam

injected plasma, namely energy dependent magnetic field trapping and energy dependent trapping due to the effective electrostatic potential. If

$$(\Phi_0(\chi,\psi) - m_a u_E^{(0)2}/(2e_a))|_{\chi=0} > (\Phi_0(\chi,\psi) - m_a u_E^{(0)2}/(2e_a))|_{\chi=\pi} \tag{3.3-11}$$

then trapping can occur on both the inside (effective electrostatic field trapping) and on the outside (energy dependent magnetic field trapping) of the torus whereas if

$$(\Phi_0(\chi,\psi) - m_a u_E^{(0)2}/(2e_a))|_{\chi=0} < (\Phi_0(\chi,\psi) - m_a u_E^{(0)2}/(2e_a))|_{\chi=\pi} \tag{3.3-12}$$

then trapping occurs only on the outside (energy dependent magnetic field trapping) of the torus [60,70]. As a result the pitch angle variable can be bounded by the inequality

$$\lambda_c^i < \lambda \leq \hat{\lambda} \tag{3.3-13}$$

where i = B or Φ and

$$\hat{\lambda} = (\langle B^2\rangle^{1/2}/B)[1 - e_a/(m_a H)[\Phi_0(\chi,\psi) - m_a u_E^{(0)2}/(2e_a)]]. \tag{3.3-14}$$

It is noteworthy that both types of trapping effects for all magnitudes of the effective electrostatic potential at different poloidal locations on a flux surface have been included in eq.(3.3-13). In particular since the trapping

boundary limits are dependent on the effective electrostatic potential, it will indeed be dependent on the angular frequency of rotation. If the plasma rotation is large then magnetic detrapping effects can occur. On the other hand strong rotation can also cause a significant enhancement in the electrostatic field at the outer part of the torus causing trapping on the inside of the torus with the boundary limit on the trapped regime being dictated by the magnitude of the effective electrostatic potential. Consequently in general the total particle trapping will be a combination of magnetic and effective electrostatic field trapping, thereby significantly modifying the fraction of trapped particles. In view of the trapped regime boundary limits, the desired boundary condition for trapped particles assumes the general form [22,23,60,70]:

$$\hat{g}_{a(0)}(\chi=\pm\chi_c^i(\lambda);\varepsilon=1) = \hat{g}_{a(0)}(\chi=\pm\chi_c^i(\lambda);\varepsilon=-1) \tag{3.3-15}$$

where $\pm\chi_c^i(\lambda)$ for $i = B, \Phi$ are the turning points where $V_\parallel$ vanishes.

A second boundary condition arises from the untrapped or circulating particles. In particular $\hat{g}_{a(0)}$ must be single-valued and continous over the full range of the poloidal angle, i.e.

$$\hat{g}_{a(0)}(\chi) = \hat{g}_{a(0)}(\chi+2\pi) \quad . \tag{3.3-16}$$

In view of eqs.(3.3-15) and (3.3-16), a set of constraint equations which govern the behavior of the surface function $\hat{h}_a(\psi)$ can be formulated by applying the bounce-average operator ($\S(d\ell/V_{\parallel})$) for both trapped and untrapped particles. The net result of this operation process yields the following set of constraint equations:

$\underline{0 \leq \lambda < \lambda_c^i}$

$$\sum_b \int_0^{2\pi} (C_{ab}(\hat{g}_{a(0)}, \hat{g}_{b(0)}) + S_{aB}(F_a, f_B)) B\sqrt{g}d\chi/V_{\parallel} = 0 \tag{3.3-17}$$

$\underline{\lambda_c^i < \lambda \leq \hat{\lambda}}$

$$\sum_{\varepsilon=-1}^{1} (\sum_b \int_{\chi_1}^{\chi_2} (C_{ab}(\hat{g}_{a(0)}, \hat{g}_{b(0)}) + S_{aB}(F_a, f_B)) B\sqrt{g}d\chi/|V_{\parallel}|) = 0 \ . \tag{3.3-18}$$

Note here that in obtaining both eqs.(3-3-17) and (3.3-18) the free streaming and electrostatic components of these equations are annihilated by the bounce average operator, therefore the effects of these components on the trapped and untrapped particles vanish on the average in the frame moving with the plasma. Near the boundary between trapped and untrapped particles the analysis becomes invalid since the scattering angle to untrap a trapped particle becomes very small and the bounce time becomes very long for the transition particles existing in the vicinity of the maximum field boundary limit. As a result a closer examinaton of

the finite boundary layer effects is needed to solve the complete problem. However in this thesis the small correction due to the existence of a finite boundary layer will be ignored and the boundary layer will be taken into account only to the extent that a finite jump in $\partial\hat{h}_a/\partial\lambda$ occurs across it.

To obtain the functional structure of $\hat{h}_a(\psi)$ the $\ell = 1$ harmonic component of the collision operator and external momentum input term can be used in conjunction with eqs.(3.3-17) and (3.3-18) and the resulting expression transformed into a set integro-differential equations of the form [108]:

$$\underline{0 \leq \lambda < \lambda_c^i}$$

$$\partial[\lambda\langle V_\parallel\rangle\partial h_a(\psi)/\partial\lambda]/\partial\lambda = 2HK_a(\psi,V)F_a/(n_a v_{ta}^2) \tag{3.3-19}$$

$$\underline{\lambda_c^i < \lambda \leq \hat{\lambda}}$$

$$\partial[\lambda(\int_{\chi_1}^{\chi_2} \sqrt{g}V_\parallel d\chi)\partial h_a(\psi)/\partial\lambda]/\partial\lambda = 0 \quad . \tag{3.3-20}$$

Here H is the total system Hamiltonian and the surface function $K_a(\psi)$ is defined such that

$$K_a(\psi,V) = \sum_j^1 (\langle U_{\perp alj}^{\chi} L_j^{3/2}(x_a^2) n_a B/\langle B^2\rangle^{1/2} - \langle n_a \vec{B}\cdot\vec{W}_a/(\eta_a^{\perp} \langle B^2\rangle^{1/2})\rangle) \tag{3.3-21}$$

the diamagnetic particle and heat flows,

$$\vec{W}_a = (1 - \eta_a^s/\eta_a^\perp)\eta_a^\perp \vec{U}_{a1}^V(V)/(2x_a^2) + \sum_b (\vec{S}_{ab}^{(1)}(V) + \vec{S}_{aB}^{(1)}(V)) \tag{3.3-22}$$

is a global velocity function which accounts for the $\ell = 1$ velocity (energy) diffusion components of the collisional friction and external momentum source operators, and the $\ell = 1$ harmonic component of the collision operator has been expressed in terms of the pitch angle operator ,i.e.

$$C_{ab}^{(1)}(\hat{g}_{a(0)},\hat{g}_{b(0)}) = \eta_{ab}^\perp L g_{a(0)} + (1 - \eta_{ab}^s/\eta_{ab}^\perp)\eta_{ab}^\perp \vec{V}_\parallel \cdot \vec{U}_{a1}^V(V) F_a/V^2 + 2\vec{V}_\parallel/v_{ta}^2 \cdot \vec{S}_{ab}^{(1)}(V) F_a \tag{3.3-23}$$

where

$$L = 2(V_\parallel/V)(V^2/(2H)\langle B^2\rangle^{1/2}/B\partial(\lambda V_\parallel/V\partial/\partial\lambda)/\partial\lambda \tag{3.3-24}$$

is the pitch angle operator and

$$\vec{U}_{a1}^V(V) = 3/(4\pi F_a)\int_{\hat{\Omega}} V_\parallel \hat{g}_{a(0)} d\hat{\Omega}\, \hat{n}_\parallel \,. \tag{3.3-25}$$

Furthermore the term $\eta_a^\perp L U_a^\chi * F_a \propto P_2(V_\parallel/V)\eta_a^\perp F_a$ has been neglected in formulating eqs.(3.3-19) and (3.3-20) since the $V_\parallel \bar{L}_j^{3/2}(x_a^2)$ moment for j = 0,1 of this expression vanishes. Note here that in obtaining a solution to eqs.(3.3-19) in

the well-untrapped regime it has been assumed that to the lowest order approximation the poloidal variations of the effective electrostatic potential is small in comparison to the the kinetic energy of the passing particles and consequently

$$L \cong V_{\parallel}\langle B^2\rangle^{1/2}/(BH)\partial(\lambda V_{\parallel}\partial/\partial\lambda)/\partial\lambda \tag{3.3-26}$$

thereby allowing an approximate solution to be obtained. This assumption has been necessitated by the fact that the collision operator is not a function of the total energy but rather a complicated function of the particle kinetic energy which is not a constant of the motion.

One solution to eqs.(3.3-19) and (3.3-20) which is well behaved as $\lambda \to 0$ (free circulating particles) is [22]:

$$\hat{h}_a(\psi) = 2\hat{U}_{\parallel}(\lambda,V)\hat{H}(\lambda_c^i - \lambda)K_a(\psi,V)F_a/(n_a v_{ta}^2) \tag{3.3-27}$$

where

$$\hat{U}_{\parallel}(\lambda,V) = -\int_{\lambda}^{\lambda_c^i}(Hd\lambda/\langle V_{\parallel}\rangle) = -V/2\int_{\bar{\lambda}}^{\bar{\lambda}_c^i}(d\bar{\lambda}/\langle[1 - \bar{\lambda}B/\langle B^2\rangle^{1/2}]^{1/2}\rangle) \tag{3.3-28}$$

with H(z) being the unit step function (H(z) = 1 for z > 0 otherwise H(z) = 0) and

$$\bar{\lambda} = 2\mu\langle B^2\rangle^{1/2}/V^2 = \lambda/(1 - e_a/(m_a H)[\Phi_0(\chi,\psi) - m_a u_E^{(0)2}/(2e_a)]) . \tag{3.3-29}$$

Physically eq.(3.3-27) vanishes in trapped particle space and is continuous at $\lambda = \lambda_c^i$ (This is in adherence to the neglect of the boundary layer effects). Combining eqs.(3.3-4) and (3.3-27) yields

$$\hat{g}_{a(0)} = 2\vec{V}_{\parallel}/v_{ta}^2 \cdot \sum_j^1 (U_{\perp a1j}^{\chi} \bar{L}_j^{3/2}(x_a^2)\hat{n}_{\parallel})F_a + 2\hat{H}(\lambda_c^i - \lambda)\hat{U}_{\parallel}(\lambda,V)$$

$$K_a(\psi,V)F_a/(n_a v_{ta}^2) + U_a^{\chi *}F_a \ . \tag{3.3-30}$$

Before continuing with the present analysis, it is instructive to compare the results obtained thus far to that of previous authors. In particular, a simple calculation of the ion heat flux for a two species plasma consisting of a heavy impurity ion and a hydrogenic ion species so that the Lorentz model is applicable is made. To compare the results of this analysis to that of the literature, only the effective electrostatic trapping effects will be considered. Consequently the direct beam collisional effects and the collisional field particle response to momentum and energy diffusion effects will be neglected in computing $K_i(\psi,V)$. In addition, only ion-impurity collisions will be considered ($\eta_{iz}^s > \eta_{ii}^s$) and in keeping with the previous assumptions, the ion-impurity collision operator will be approximated by the Lorentz pitch-angle scattering operator

$$C_{iZ}^{(1)}(\hat{g}_{i(0)},\hat{g}_{Z(0)}) \cong -\eta_{iZ}^{\perp} L\hat{g}_{i(0)} = -\eta_{iZ}^{\perp}\langle B^2\rangle^{1/2} V_{\parallel}/(BH)\partial(\lambda V_{\parallel}$$

$$\partial\hat{g}_{i(0)}/\partial\lambda)/\partial\lambda \ . \tag{3.3-31}$$

In view of these simplifications, eq(2.5-12) for j = 1 can be combined with eqs.(3.3-21) through (3.3-31) to give

$$q_i^{\psi} = -\kappa_i^{\psi}\partial T_i(\psi)/\partial\psi \tag{3.3-32}$$

where

$$\kappa_i^{\psi} \cong 2m_iT_i(\psi)/v_{ti}^2<(2\pi I/(e_iB))^2\int_{\vec{V}} n_{iZ}^{\perp}V_{\parallel}L_1^{3/2}(x_i^2)[V_{\parallel}L_1^{3/2}(x_i^2) + V_{\parallel}/H\partial(\lambda V_{\parallel}\partial[\hat{H}(\lambda_c^i - \lambda)\hat{U}_{\parallel}(\lambda,V)<n_iB>/(n_iB)]/\partial\psi)/\partial\psi]F_id^3V> \tag{3.3-33}$$

is the ion thermal conductivity coefficient. To cast eq.(3.3-33) into a form which can be easily compared to that of the literature, the large aspect ratio approximation is made where

$$n_i = \bar{N}_i(r)e^{-e_i/T_i[\hat{\Phi}_0(r,\theta) - <\hat{\Phi}_0(r,\theta)>]} \cong \bar{N}_i(r)[1 - rX_0\cos\theta/R_0] \tag{3.3-34}$$

$$\bar{N}_i(r) = N_i(r)e^{e_i<\hat{\Phi}_0(r,\theta)>/T_i} \tag{3.3-35}$$

$$e_i/T_i[\hat{\Phi}_0(r,\theta) - <\hat{\Phi}_0(r,\theta)>] = rX_0\cos\theta/R_0 \tag{3.3-36}$$

$$\hat{\Phi}_0(r,\theta) = \Phi_0(r,\theta) - m_iu_E^{(0)^2}/(2e_i) \tag{3.3-37}$$

$$B = <B^2>^{1/2}/(1 + r\cos\theta/R_0) \cong <B^2>^{1/2}(1 - r\cos\theta/R_0) \tag{3.3-38}$$

$$B_\theta/B_\phi << 1 \tag{3.3-39}$$

$$I/B \cong e_i R_0 \langle B^2\rangle^{1/2} \langle B_\theta^2\rangle^{1/2}/(m_i B \Omega_{\theta i}) \tag{3.3-40}$$

and

$$\Omega_{\theta i} = (e_i \langle B^2\rangle^{1/2}/m_i)(\langle B_\theta^2\rangle^{1/2}/\langle B_\phi^2\rangle^{1/2}) = e_i \langle B_\theta^2\rangle^{1/2}/m_i \,. \tag{3.3-41}$$

Combining eqs.(3.3-34) through (3.3-41) with eq.(3.3-33) and carrying out the indicated mathematical operation yields

$$\kappa_i^\psi \cong 3/8 \langle \{ \eta_{iZ}^{+} I_{iZ}(V) \} \rangle \tag{3.3-42}$$

where

$$I_{iZ}(V) = 2[\bar{L}_1^{3/2}(x_i^2)]^2 [(r/R_0)^{1/2} |1 - 2X_0 T_i/V^2| (1 - \cos\theta)^{1/2} + (r/R_0)^{3/2} |1 - 2X_0 T_i/V^2| (1 - \cos\theta)^{3/2}] \,. \tag{3.3-43}$$

In particular, it can be shown that in the limit $\omega_{-1}(\psi) \to 0$ the above expression reduces to the same result as that obtained in reference [60] implying that with a modest poloidal electric field the neoclassical ion conductivity coefficient is significantly enhanced over the conventional value (magnetic trapping only) due to the electrostatic potential trapping effects. For the more general analysis

carried out in this thesis, the direct beam collisional effects and all beam induced effects are retained in the ensuing analysis.

The expression for $\hat{g}_{a(0)}$ can be simplified by multiplying both sides of eq.(3.3-30) by $\vec{B}\cdot\vec{V}/(2x_a^2\langle B^2\rangle^{1/2})$, integrating the resulting expression over all velocity space angular distributions (i.e. integrate over solid angle $\hat{\Omega}$) and flux surface averaging the result. In essence, this enables the term $\langle n_a\vec{B}\cdot\vec{U}_{a1}^V(V)/(2x_a^2\langle B^2\rangle^{1/2})\rangle$ to be eliminated from the global velocity function K_a thereby yielding the simplified expression:

$$\langle n_a\vec{B}\cdot\vec{U}_{a1}^V(V)/(2x_a^2\langle B^2\rangle^{1/2})\rangle = \sum_j^1 -(\langle n_a BU_{\perp a1j}^X\bar{L}_j^{3/2}(x_a^2)/\langle B^2\rangle^{1/2}\rangle$$

$$\bar{f}_T^B\eta_a^{\perp}/\bar{\eta}_a^B) + \sum_b(\langle n_a\vec{B}\cdot[\vec{S}_{ab}^{(1)}(V) + \vec{S}_{aB}^{(1)}(V)]/\langle B^2\rangle^{1/2}\rangle(1 - \bar{f}_T^B)/\bar{\eta}_a^B) \tag{3.3-44}$$

where

$$\bar{f}_T^B = \langle f_T^B\rangle \tag{3.3-45}$$

$$\bar{f}_c^B = \langle \bar{f}_c^B\rangle \tag{3.3-46}$$

and

$$\bar{\eta}_a^B = \langle \eta_a^B\rangle \quad . \tag{3.3-47}$$

Here

$$f_c^B = (1 - f_T^B) = 3/4\int_0^{\bar{\lambda}_c^i}(d\bar{\lambda}/\ [1 - \bar{\lambda}B/\langle B^2\rangle^{1/2}]^{1/2}\ ) \leq 1 \tag{3.3-48}$$

is the fraction of trapped particles and

$$\bar{\eta}_a^B = \eta_a^s \bar{f}_c^B + \eta_a^{\perp} \bar{f}_T^B \tag{3.3-49}$$

is a modified neoclassical collision frequency [22]. Note here that since λ_c^i encompasses all trapping mechanisms, then it follows that the beam induced trapping effects can significantly modify the fraction of trapped particles depending on the particular electrostatic field configuration and the magnitude of the angular frequency of rotation. Furthermore observe that in obtaining eq.(3.3-44) to the lowest order approximation

$$\langle 1 - f_c^B B^2/\langle B^2\rangle\rangle \cong \langle 1 - f_c^B\rangle + \text{higher order terms in } \epsilon$$

$$\cong \langle f_T^B\rangle + \text{higher order terms in } \epsilon \tag{3.3-50}$$

where here the large aspect ratio limit, which is applicable to most present generation tokamaks, has been employed. Combining eq.(3.3-44) with (3.3-30) and rearranging the result yields

$$\hat{g}_{a(0)} = 2\vec{V}_{\parallel}/v_{ta}^2 \cdot \sum_j^1 (1 - c_j^B V_a^{B*}) U_{\perp aj}^{\chi} \bar{L}_j^{3/2}(x_a^2) F_a \hat{n}_{\parallel} + 2\vec{V}_{\parallel}/v_{ta}^2 \cdot (V_a^B$$

$$\vec{N}_a(\psi,V))F_a/n_a + U_a^{\chi *} F_a \tag{3.3-51}$$

where

$$c_j^B = \langle U^{\chi}_{\perp a1j}\bar{L}_j^{3/2}(x_a^2)n_a\vec{B}\cdot\hat{n}_{\parallel}\rangle/(U^{\chi}_{\perp a1j}\bar{L}_j^{3/2}(x_a^2)n_a\langle B^2\rangle^{1/2}) \tag{3.3-52}$$

$$\vec{V}_a^B = \hat{H}(\lambda_c^i - \lambda)\hat{U}_{\parallel}(\lambda,V)\eta_a^s/(V_{\parallel}\bar{\eta}_a^B)\hat{n}_{\parallel} \tag{3.3-53}$$

$$V_a^{B*} = \vec{B}\cdot\vec{V}_a^B/\langle B^2\rangle^{1/2} \tag{3.3-54}$$

$$\vec{N}_a(\psi,V) = \sum_b\langle(n_a\vec{B}\cdot[\vec{S}_{ab}^{(1)}(V) + \vec{S}_{aB}^{(1)}(V)])\rangle/(\eta_a^s\langle B^2\rangle^{1/2})\hat{n}_{\parallel} . \tag{3.3-55}$$

Now in order to obtain a constitutive relationship for the neoclassical component of the parallel stress forces, the $\ell = 2$ harmonic component of the $O(\delta^1\gamma_a^0)$ order equation must be obtained. In this regard, consider the $\langle m_a B\int_{\vec{V}} V_{\parallel}\cdots d^3V\rangle$ moment of the L.H.S. of eq.(3.3-3):

$$\langle m_a\int_{\vec{V}} V_{\parallel}^2\vec{B}\cdot\vec{\nabla}(\hat{g}_{a(1)}^{(1)} - 2e_a\Phi_1(\chi,\psi)F_a/(m_a v_{ta}^2))d^3V\rangle = -\langle m_a\vec{B}\cdot\int_{\vec{V}}(\hat{g}_{a(1)}^{(1)}$$

$$- 2e_a\Phi_1(\chi,\psi)F_a/(m_a v_{ta}^2))V_{\parallel}^2\vec{\nabla}(d^3V)\rangle - \langle m_a\vec{B}\cdot\int_{\vec{V}}(\hat{g}_{a(1)}^{(1)} - 2e_a\Phi_1(\chi,\psi)$$

$$F_a/(m_a v_{ta}^2))\vec{\nabla}V_{\parallel}^2\, d^3V\rangle \cong -\langle 2m_a\int_{\vec{V}} x_a^2P_2(V_{\parallel}/V)\hat{g}_{a(1)}^{(1)}d^3V\,(\hat{n}_{\parallel}\cdot\vec{\nabla}B)\rangle =$$

$$-\langle\vec{B}\cdot\vec{\nabla}\cdot\overleftrightarrow{\Pi}_a\rangle \tag{3.3-56}$$

where here the term

$$\langle(e_a/m_a)(\vec{B}\cdot\vec{\nabla}\Phi_0(\chi,\psi))\int_{\vec{V}}(\hat{g}_{a(1)}^{(1)} - 2e_a\Phi_1(\chi,\psi)F_a/(m_a v_{ta}^2))d^3V\rangle \tag{3.3-57}$$

has been neglected in formulating eq.(3.3-56) since only the lowest order approximation is desired (recall that for a strongly rotating plasma the parallel gradient in the effective electrostatic potential is small in comparison to the pressure stress). In view of eq.(3.3-56) the $\ell = 2$ harmonic component of the particle distribution function can be expressed as follows:

$$\hat{g}^{(2)}_{a(0)} = 2x_a^2 P_1^2(V_\parallel/V)\Big(\sum_j^1 [\eta_a^\perp(n_a B U^\chi_{\perp alj}\bar{L}_j^{3/2}(x_a^2) + [n_a B c_j^B U^\chi_{\perp alj}$$

$$\bar{L}_j^{3/2}(x_a^2) - \langle B^2\rangle^{1/2}\hat{n}_\parallel\cdot\vec{N}_a(\psi,V)]L(V_\parallel V_a^{B*})/V_\parallel) - ((1 - n_a^s/\bar{n}_a^B)\eta_a^\perp$$

$$n_a\vec{B}\cdot\vec{U}^V_{a1}(V)/(2x_a^2) + \sum_b[n_a\vec{B}\cdot(\vec{S}^{(1)}_{ab}(V) + \vec{S}^{(1)}_{aB}(V))]\Big)]/(2x_a^2$$

$$P_2(V_\parallel/V))F_a/n_a \ . \tag{3.3-58}$$

Furthermore, in anticipation of the mathematical analysis to be carried out in section 3.5 of this chapter, eq.(3.3-3) is multiplied by $\hat{U}_\parallel(\lambda,V)\langle B^2\rangle^{1/2}\oint d\ell/V_\parallel/(2x_a^2P_2(V_\parallel/V)\bar{f}_c^B B\int_0^{2\pi}d\ell/B)$ and the result subtracted from eq.(3.3-58) to give

$$\hat{g}^{(2)}_{a(0)} = 2x_a^2P_1^2(V_\parallel/V)\sum_j^1(I[\eta_a^\perp(n_a B U^\chi_{\perp alj}\bar{L}_j^{3/2}(x_a^2) + [n_a B c_j^B U^\chi_{\perp alj}$$

$$\bar{L}_j^{3/2}(x_a^2) - \langle B^2\rangle^{1/2}\hat{n}_\parallel\cdot\vec{N}_a(\psi,V)]L(V_\parallel V_a^{B*})/V_\parallel) - ((1 - n_a^s/\bar{n}_a^B)\eta_a^\perp$$

$$n_a\vec{B}\cdot\vec{U}^V_{a1}(V)/(2x_a^2) + \sum_b[n_a\vec{B}\cdot(\vec{S}^{(1)}_{ab}(V) + \vec{S}^{(1)}_{aB}(V))])F_a/n_a])F_a/n_a \tag{3.3-59}$$

where the integral operator $I[A(V)]$ is defined such that

$$I[A(V)] = [n_a A(V) B^2 \bar{f}_c^B / \langle B^2 \rangle - n_a V_a^B * \bar{\eta}_a^B \langle BA(V)/V_{\parallel} \rangle / \eta_a^s] \langle B^2 \rangle / (2x_a^2 P_2(V_{\parallel}/V) \bar{f}_c^B B^2 F_a) \ . \tag{3.3-60}$$

Equation(3.3-59) can be cast into a more convenient form by noting that the lowest order parallel stress forces are weakly coupled to the flow fields of the other species. This result is a manifestation of the property that the ratio of the interspecies collisional field response component to the test particle component of the collision operator scales as $f_{b1}^{(\ell)}/(\ell^2 f_{a1}^{(\ell)})$ which exhibits a ℓ^{-2} suppression of the field harmonics even in the presence of strong momentum injection. For $\ell = 1$; $f_{b1}^{(1)} \sim f_{a1}^{(1)}$ demands that the $\ell = 1$ driving term in the equation for the (b) species be on the same order as the $\ell = 1$ driving term in the kinetic equation for the (a) species. This equivalence is understandable since the field particles will posses velocity space distortions due to the collisional interactions with the energetic beam ions as well as the other plasma species. However for $\ell = 2$, the condition that $f_{b1}^{(2)} \sim 4f_{a1}^{(2)}$ requires a driving term in the $\ell = 2$ harmonic component of the kinetic equation (stress anistropy driving terms) for the (b) species to be at least four times greater than the $\ell = 2$ driving terms in the kinetic equation for the (a) species. As a result, the lowest order parallel

stress will be weakly coupled to the flow fields of the other species in the plasma even in the presence of beam induced collisional effects. As a result, it suffices to express eq.(3.3-51) as follows:

$$\hat{g}_{a(0)} = 2\vec{V}_{\parallel}/v_{ta}^2 \cdot (\sum_j^1 U_{\perp a1j}^{\chi} \bar{L}_j^{3/2}(x_a^2)\hat{n}_{\parallel} + \vec{A}_a(\chi,\psi,V)V_a^{B*})F_a$$

$$+ U_a^{\chi *}F_a \tag{3.3-61}$$

where the function

$$\vec{A}_a(\chi,\psi,V) = [N_a(\psi,V)\langle B^2\rangle^{1/2}/B - \sum_j^1 n_a c_j^B U_{\perp a1j}^{\chi} \bar{L}_j^{3/2}(x_a^2)]\,\vec{B}$$

$$/(n_a\langle B^2\rangle^{1/2}) \tag{3.3-62}$$

can be specified in terms of the flow fields of the (a) species by expanding this function in a two term Laguarre series of the form [8]:

$$\vec{A}_a(\chi,\psi,V) = \sum_j^1 c_{aj}^{\chi}(\psi)\bar{L}_j^{3/2}(x_a^2)\,\vec{B}/(n_a\langle B^2\rangle^{1/2}) \ . \tag{3.3-63}$$

Consequently, using this expansion series in eq.(3.3-61) for $\vec{A}_a(\chi,\psi,V)$, selecting the $V_{\parallel}\bar{L}_j^{3/2}(x_a^2)/(n_a\{[\bar{L}_j^{3/2}]^2\})$ moments of the resulting expression and solving for the expansion coefficients yields [8]

$$c_{aj}^{\chi}(\psi) = (n_a)^j U_{a1j}^{\chi}\langle B^2\rangle^{1/2} \tag{3.3-64}$$

and therefore, eq.(3.3-59) assumes the desired form, namely,

$$\hat{g}^{(2)}_{a(0)} = 2x_a^2 P_1^2 (V_\parallel/V) \sum_j^1 U^{\chi}_{a1j} \bar{L}_j^{3/2}(x_a^2) A^B_{aj*} (\hat{n}_\parallel \cdot \vec{\nabla} B) F_a / n_a^{(1-j)} + \hat{g}^{*(2)}_{a(0)} \tag{3.3-65}$$

where

$$A^B_{aj*} = I[\eta_a^{\perp}(U^{\chi}_{a1j} \bar{L}_j^{3/2}(x_a^2) BL(V_\parallel V_a^B) F_a / (n_a^{(1-j)} V_\parallel)] / ((n_a)^j U^{\chi}_{a1j} \bar{L}_j^{3/2}(x_a^2)(\hat{n}_\parallel \cdot \vec{\nabla} B)) \tag{3.3-66}$$

and

$$\hat{g}^{*(2)}_{a(0)} = 2x_a^2 P_1^2 (V_\parallel/V) \sum_j^1 (I[\eta_a^{\perp}(n_a B U^{\chi}_{\perp a1j} L_j^{3/2}(x_a^2) - ((1 - \eta_a^s/\bar{\eta}_a^B) \eta_a^{\perp} n_a \vec{B} \cdot \vec{U}^V_{a1}(V)/(2x_a^2) + \sum_b [n_a \vec{B} \cdot (\vec{S}^{(1)}_{ab}(V) + \vec{S}^{(1)}_{aB}(V))])) F_a / n_a]) F_a / n_a \, . \tag{3.3-67}$$

In summary, eqs.(3.3-51) and (3.3-65) represent the general solutions to the $O(\delta^1)$ kinetic equation in the banana regime for a strongly rotating beam injected plasma. However to obtain friction-flow constitutive relationships in terms of the parallel hydrodynamic flows, it is more convenient at this point to express eq.(3.3-51) in terms of the hydrodynamic flows. In particular, selecting the $V_\parallel \bar{L}_j^{3/2}(x_a^2)/(n_a\{[\bar{L}_j^{3/2}]^2\})$ moments of eq.(3.3-51) for j = 0,1 yields

$$\vec{U}_{\parallel a1j} = \sum_k^1 (c^j_{ak} U^{\chi}_{\perp a1k} + M^j_a) \hat{n}_\parallel \tag{3.3-68}$$

where

$$c^j_{ak} = \{\bar{L}^{3/2}_j(x^2_a)L^{3/2}_k(x^2_a)[1 - f^B_c c^B_k \eta^s_a B/(\bar{\eta}^B_a \langle B^2\rangle^{1/2})]\}/\{[\bar{L}^{3/2}_j]^2\} \tag{3.3-69}$$

and

$$M^j_a = \{f^B_c N_a(\psi,V)\bar{L}^{3/2}_j(x^2_a)B/(n_a\bar{\eta}^B_a\langle B^2\rangle^{1/2})\}/\{(\bar{L}^{3/2}_j(x_a))^2\} . \tag{3.3-70}$$

Using the above expressions in eq.(3.3-51) and rearranging gives

$$\hat{g}_{a(0)} = 2\vec{V}_{\parallel}/v^2_{ta}\cdot\sum_j^1 \vec{U}_{\parallel a1j}\bar{L}^{3/2}_j(x^2_a)F_a + U^{\chi}_a{}^{*}F_a + \hat{g}^{*}_{a(0)} \tag{3.3-71}$$

where the distortion function is defined such that

$$\hat{g}^{*}_{a(0)} = 2\vec{V}_{\parallel}/v^2_{ta}\cdot\sum_j^1 \vec{U}_{\parallel a1j}\bar{L}^{3/2}_j(x^2_a)C^{B}_{aj}{}^{*}F_a \tag{3.3-72}$$

with

$$C^B_{aj}{}^{*} = \sum_\ell^1([(\bar{f}^B_T c^B_\ell \bar{L}^{3/2}_\ell(x^2_a)\eta^{\perp}_a/\bar{\eta}^B_a) - \{\bar{f}^B_T c^B_\ell \bar{L}^{3/2}_\ell(x^2_a)\eta^{\perp}_a/\bar{\eta}^B_a\}]\delta_{j,0} -$$
$$[\{[\bar{L}^{3/2}_j(x^2_a)]^2\}\langle B^2\rangle/B^2 + (c^B_j\bar{L}^{3/2}_j(x^2_a)(\{(\bar{L}^{3/2}_j(x^2_a))^2\}/\bar{L}^{3/2}_j(x^2_a))$$
$$(1 - \langle B^2\rangle/(c^B_j B^2))) - \{\bar{f}^B_c c^B_\ell \bar{L}^{3/2}_j(x^2_a)\bar{L}^{3/2}_\ell(x^2_a)\eta^s_a/\bar{\eta}^B_a\}]\delta_{j,1})U^{\chi}_{\perp a1\ell}$$
$$B^2/(U_{\parallel a1j}\langle B^2\rangle) + [(\bar{f}^B_c N_a(\psi,V)\bar{L}^{3/2}_j(x^2_a)\eta^s_a B/(n_a\bar{\eta}^B_a\langle B^2\rangle^{1/2}U_{\parallel a1j}))$$

$$\delta_{j,0} - \{\bar{f}_c^B N_a(\psi,V)\bar{L}_j^{3/2}(x_a^2)\eta_a^s B/(n_a\bar{\eta}_a^B\langle B^2\rangle^{1/2}U_{\parallel a1j})\}] + [(\bar{L}_\ell^{3/2}(x_a^2)$$

$$\eta_a^s/\bar{\eta}_a^B - N_a(\psi,V)\bar{L}_j^{3/2}(x_a^2)\eta_a^s\langle B^2\rangle^{1/2}\delta_{j,0}/(n_a\bar{\eta}_a^B BU_{\perp a1\ell}^{\chi}))B^2/\langle B^2\rangle -$$

$$c_\ell^B V_a^B{*}\delta_{\ell,j}(\bar{L}_\ell^{3/2}(x_a^2) - N_a(\psi,V)\eta_a^s\langle B^2\rangle^{1/2}/(n_a c_\ell^B\bar{\eta}_a^B BU_{\perp a1\ell}^{\chi}))U_{\perp a1\ell}^{\chi}$$

$$/U_{\parallel a1j})/\{[\bar{L}_j^{3/2}(x_a^2)]^2\} \quad . \tag{3.3-73}$$

Finally, upon combining eq.(3.3-71) with eq.(3.3-65) yields the following general solution to the $O(\delta^1)$ kinetic equation in the long mean free path regime:

$$\hat{f}_{a1} = \hat{f}_{a1}^{(1)} + \hat{f}_{a1}^{(2)} \tag{3.3-74}$$

where $\hat{f}_{a1}^{(1)}$ and $\hat{f}_{a1}^{(2)}$ are the $\ell = 1$ and $\ell = 2$ harmonic components of the particle distribution function respectively, and are defined such that

$$\hat{f}_{a1}^{(1)} = \hat{g}_{a(0)} - U_a^{\chi}{*}F_a \tag{3.3-75}$$

and

$$\hat{f}_{a1}^{(2)} = \hat{g}_{a(0)}^{(2)} + U_a^{\chi}{*}F_a \quad . \tag{3.3-76}$$

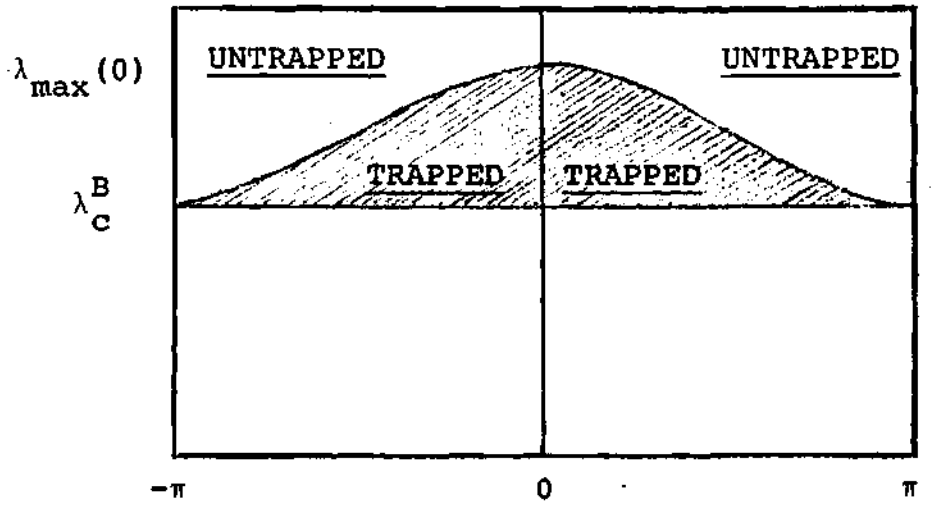

CASE I

$$v^2 >> 2e_a\hat{\Phi}_0/m_a$$

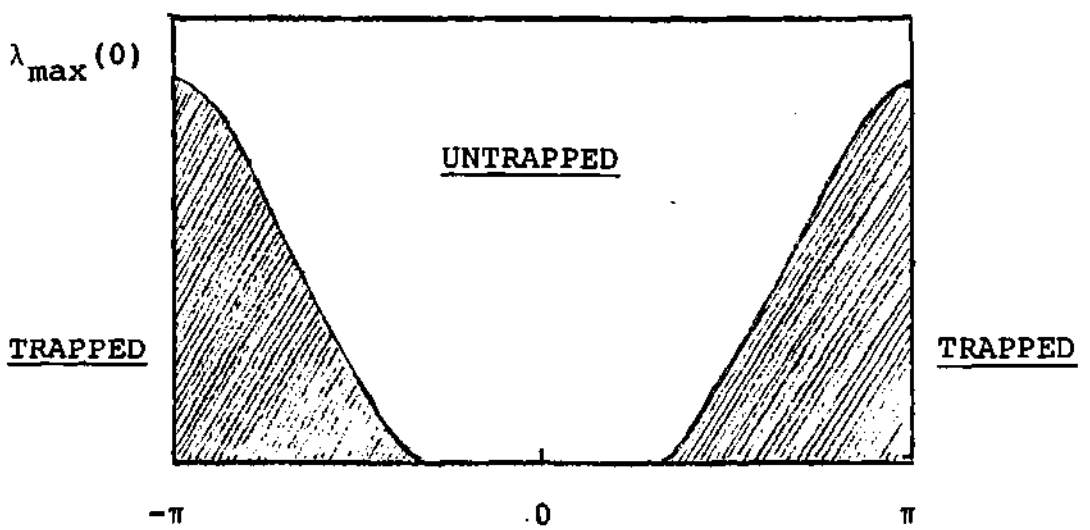

CASE II

$$v^2 < 2e_a\hat{\Phi}_0/m_a$$

$$\& \quad \hat{\Phi}_0|_{\chi=\pi} < \hat{\Phi}_0|_{\chi=0}$$

FIGURE (3.3-1)

MAGNETIC AND EFFECTIVE ELECTROSTATIC FIELD TRAPPING BOUNDARIES

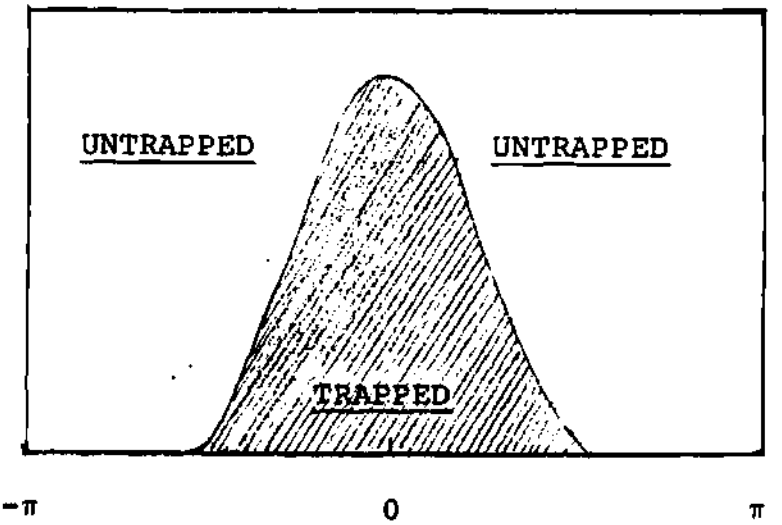

CASE III

$$v^2 < 2e_a\hat{\Phi}_0/m_a$$

$$\& \quad \hat{\Phi}_0|_{\chi=\pi} > \hat{\Phi}_0|_{\chi=0}$$

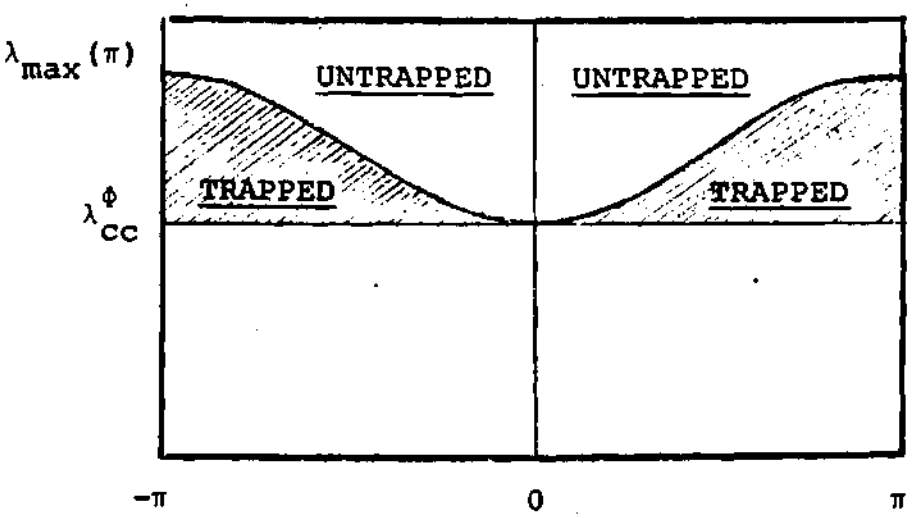

CASE IV

$$2e_a\hat{\Phi}_0/m_a < v^2 < 2\varepsilon e_a\hat{\Phi}_0/m_a$$

$$\& \quad \hat{\Phi}_0|_{\chi=\pi} < \hat{\Phi}_0|_{\chi=0}$$

FIGURE (3.3-1)

MAGNETIC AND EFFECTIVE ELECTROSTATIC FIELD TRAPPING BOUNDARIES

where

$$\lambda = \mu\langle B^2\rangle^{1/2}/H$$

$$\hat{\Phi}_0(\chi,\psi) = \Phi_0(\chi,\psi) - m_a u_E^{(0)^2}/(2e_a)$$

$$\lambda_{max}(0) = \langle B^2\rangle^{1/2}/B|_{\chi=0}$$

$$\lambda_{max}(\pi) = \langle B^2\rangle^{1/2}/B|_{\chi=0}$$

and λ_c^B & λ_c^Φ are given by eqs.(3.3-8) and (3.3-10) respectively.

FIGURE (3.3-1)

MAGNETIC AND EFFECTIVE ELECTROSTATIC FIELD TRAPPING BOUNDARIES

3.4 DETERMINATION OF THE PLATEAU REGIME PARTICLE DISTRIBUTION FUNCTION FOR A STRONGLY ROTATING BEAM INJECTED PLASMA

In the plateau regime the effect of the magnetic field modulations along the field lines due to the mirror force are small. Furthermore for a strongly rotating beam injected plasma, the parallel gradient in the effective electrostatic potential is small in comparison to the kinetic energy of the particle. As a result, the parallel component of the particles velocity is approximately constant in the absence of collisional interactions [36-39]. In this regime trapped particles no longer persist and the well-untrapped particles are nearly collisionless, therefore the diffusion process is governed by particles in the "resonant region" of velocity space [36-39]. However unlike the conventional theory (slow rotation limit), the resonant region of velocity space and therefore the fraction of resonant particles becomes energy dependent when $v_\phi \sim v_{ta}$. In essence, the particles scatter out of the resonant region in a time comparable to the poloidal transit time, i.e., the time required to travel a distance of $rB/(\vec{B}\cdot\hat{n}_\chi)$ along the magnetic field lines times a rotational correction factor which is essentially the ratio of the effective electrostatic field divided by the particle kinetic energy as seen by an observer in the frame moving with the plasma.

For a strongly rotating plasma, the toroidal drifts of the resonant particles due to the gradients of the magnetic field and the fictitious forces are not compensated for by their motion around the minor circumference, and therefore experience a net radial excursion from a flux surface. In this section the conventional techniques of neoclassical kinetic theory will be employed to obtain a solution to the drift kinetic equation for a strongly rotating momentum injected plasma.

To solve the $O(\delta^1)$ drift kinetic equation in the plateau regime, eq.(2.2-50) can be expressed as follows:

$$\vec{V}_{\parallel}\cdot\vec{\nabla}[\hat{f}_{a1} + (2\pi I\hat{n}_{\parallel}\cdot\vec{v}/(\gamma'\Omega_a)\partial \ln F_a/\partial\psi + 2\pi m_a/(\gamma' e_a)(I\hat{n}_{\parallel}\cdot\vec{v}/(B v_{ta}))^2\partial(R^{-1}\vec{u}_E^{(0)}\cdot\hat{n}_{\phi})/\partial\psi - 2e_a\Phi_1(\chi,\psi)/(m_a v_{ta}^2))F_a] = \sum_b C_{ab}(\hat{f}_{a1}, \hat{f}_{b1}) + S_{aB}(F_a, f_B) \tag{3.4-1}$$

where $\vec{v} = \vec{V} - \vec{u}_E^{(0)}$ is the parallel velocity as seen by an observer in the lab frame. To gain some insight into the lowest order solution to the above expression, eq.(3.4-1) can be integrated over all velocity space to obtain the following intro-differential equation:

$$\vec{B}\cdot\vec{\nabla}[\int_{\vec{V}} V_{\parallel}/B(\hat{f}_{a1} + (2\pi I\hat{n}_{\parallel}\cdot\vec{v}/(\gamma'\Omega_a)\partial \ln F_a/\partial\psi + 2\pi e_a/(\gamma' m_a)(I\hat{n}_{\parallel}\cdot\vec{v}/B v_{ta}))^2\partial(R^{-1}\vec{u}_E^{(0)}\cdot\hat{n}_{\phi})/\partial\psi - 2e_a\Phi_1(\chi,\psi)/(m_a v_{ta}^2))F_a)d^3V] = 0 . \tag{3.4-2}$$

Solving this equation by integration and retaining terms $\leq O(\delta^1)$ yields

$$\int_{\vec{V}} V_{\parallel}/B(\hat{f}_{a1} + (2\pi I\hat{n}_{\parallel}\cdot\vec{v}/(\gamma'\Omega_a)\partial \ln F_a/\partial\psi + 2\pi m_a/(\gamma' e_a)(I\hat{n}_{\parallel}\cdot\vec{v}/(B v_{ta}))^2\partial(R^{-1}\vec{u}_E^{(0)}\cdot\hat{n}_{\phi})/\partial\psi - 2e_a\Phi_1(\chi,\psi)/(m_a v_{ta}^2))F_a)d^3V = \hat{h}_a(\psi) \tag{3.3-3}$$

where here the surface function $\hat{h}_a(\psi)$ arises as a constant of integration. Now to account for collisional effects, the surface function $\hat{h}_a(\psi)$ can be expressed as follows [38,39,67,71]:

$$\hat{h}_a(\psi) = \int_{\vec{V}} V_{\parallel}/B(J_a(\psi,V)\vec{B}\cdot\hat{V}/\langle B^2\rangle^{1/2})F_a d^3V/n_a \tag{3.3-4}$$

where the global velocity function $V_{\parallel}J_a(\psi,V)/V$ accounts for the combined effects of the velocity space diffusion and field response components of the collision operator and the external source term. Consequently in view of eqs.(3.4-3) and (3.4-4) it follows that

$$\int_{\vec{V}} V_{\parallel}/B(\hat{f}_{a1} + (2\pi I\hat{n}_{\parallel}\cdot\vec{v}/(\gamma'\Omega_a)\partial \ln F_a/\partial\psi + 2\pi m_a/(\gamma' e_a)(I\hat{n}_{\parallel}\cdot\vec{v}/(B v_{ta}^2))^2\partial(R^{-1}\vec{u}_E^{(0)}\cdot\hat{n}_{\phi})/\partial\psi - 2e_a\Phi_1(\chi,\psi)/(m_a v_{ta}^2) - J_a(\psi,V)\vec{B}\cdot\hat{V}/(n_a\langle B^2\rangle^{1/2}))F_a)d^3V = 0 \tag{3.4-5}$$

implying that

$$\hat{f}_{a1} = 2\vec{V}_{\parallel}/v_{ta}^2 \cdot \sum_j^1 U_{\perp a1j}^{\chi} \bar{L}_j^{3/2}(x_a^2) F_a \hat{n}_{\parallel} + J_a(\psi,V)\vec{B}\cdot\hat{V}/(n_a\langle B^2\rangle^{1/2}) F_a$$

$$+ \hat{U}_a^{\chi *} F_a \tag{3.4-6}$$

where

$$\hat{U}_a^{\chi *} = U_a^{\chi *} + 2e_a\Phi_1(\chi,\psi)/(m_a v_{ta}^2) .$$

Finally to account for the localized pitch angle effects, the arbitrary function $\hat{g}_a$ is added to the solution for $\hat{f}_{a1}$ to obtain the following general solution:

$$\hat{f}_{a1} = 2\vec{V}_{\parallel}/v_{ta}^2 \cdot \sum_j^1 U_{\perp a1j}^{\chi} \bar{L}_j^{3/2}(x_a^2) F_a \hat{n}_{\parallel} + J_a(\psi,V)\vec{B}\cdot\hat{V}/(n_a\langle B^2\rangle^{1/2}) F_a$$

$$+ \hat{U}_a^{\chi *} F_a + \hat{g}_a \quad . \tag{3.4-7}$$

Note here that in the small rotation limit ($\omega_{-1}(\psi) \to 0$), eq.(3.4-7) reduces to the same expression as that obtained in the conventional theories [38,38,67,71] as expected.

To determine the functional structure of the surface function $J_a(\psi,V)$, recall that in the plateau regime the resonant particles exist in a localized portion of phase space for which $V_{\parallel}/V \sim (\eta_a^{\perp}/\omega_{ta})^{1/3} << 1$ [38,39], where $\omega_{ta} = V/(\pi qR)$ is the transit frequency. Consequently, upon combining eq.(3.4-7) with (3.4-1), dividing both sides of

the resulting equation by V and neglecting terms of order $O(\eta_a^{\perp}/\omega_{ta})^{2/3}$ yields:

$$\vec{V}_{\parallel}/V\cdot\vec{\nabla}[(J_a(\psi,V)\vec{B}\cdot\hat{V}/\langle B^2\ ^{1/2})F_a/n_a + \hat{g}_a] + 2\vec{V}_{\parallel}\eta_a^{\perp}/(Vv_{ta}^2)\cdot\sum_j^1 (U_{\perp a1j}^{\chi}\bar{L}_j^{-3/2}(x_a^2)\hat{n}_{\parallel})F_a + J_a(\psi,V)\vec{B}\cdot\vec{V}\eta_a^{\perp}/(V^2\langle B^2\rangle^{1/2})F_a/n_a = \eta_a^{\perp} \eta_a^{\perp}L\hat{g}_a/V + (1 - \eta_a^S/\eta_a^{\perp})\eta_a^{\perp}\vec{V}_{\parallel}\cdot\vec{U}_{a1}^V(V)F_a/V^3 + \sum_b(2\vec{V}_{\parallel}/(Vv_{ta}^2)\cdot(\vec{S}_{ab}^{(1)}(V) + \vec{S}_{aB}^{(1)}(V))F_a \tag{3.4-8}$$

where here the $\ell = 1$ harmonic component of the collision operator has been expressed in terms of the pitch angle operator. Multiplying eq.(3.4-8) by $(V/V_{\parallel})B$, neglecting all terms of order $(V_{\parallel}/V)^2 \sim (\eta_a^{\perp}/\omega_{ta})^{2/3}$ (including the localized solution $\hat{g}_a$) and flux surface averaging the result yields

$$J_a(\psi,V) = 2V/v_{ta}^2\sum_j^1\langle n_a U_{\perp a1j}^{\chi}\bar{L}_j^{-3/2}(x_a^2)\vec{B}\cdot\hat{n}_{\parallel}\rangle/\langle B^2\rangle^{1/2} + (1 - \eta_a^S/\eta_a^{\perp})\langle n_a\vec{B}\cdot\vec{U}_{a1}^V(V)\rangle/(V\langle B^2\rangle^{1/2}) + 2V/v_{ta}^2\sum_b\langle n_a\hat{n}_{\parallel}\cdot(\vec{S}_{ab}^{(1)}(V) + \vec{S}_{aB}^{(1)}(V))\vec{B}\cdot\hat{n}_{\parallel}\rangle/(\eta_a^{\perp}\langle B^2\rangle^{1/2}) \quad . \tag{3.4-9}$$

With the functional structure of $J_a(\psi,V)$ formally established, an equation for $\hat{g}_a$ can now be determined.

In this regard, it is more convenient to transform the velocity space coordinate basis from the energy basis to the velocity basis $\{V_{\parallel}, V\}$. Therefore expressing eq.(3.4-8) in terms of the desired velocity space coordinate basis yields

$$\vec{V}_{\parallel}/V\cdot\vec{\nabla}\hat{g}_a + [P_2(V_{\parallel}/V) - e_a\hat{n}_{\parallel}\cdot\vec{\nabla}(\Phi_0(\chi,\psi) - m_a u_E^{(0)2}/(2e_a))/((m_a V^2)(\hat{n}_{\parallel}\cdot\vec{\nabla}\ln B))](\hat{n}_{\parallel}\cdot\vec{\nabla}\ln B)J_a(\psi,V)BF_a/(\langle B^2\rangle^{1/2}n_a) - \eta_a^{\perp}Lg_a/V = [1 - P_1^2(V_{\parallel}/V) + 2e_a\hat{n}_{\parallel}\cdot\vec{\nabla}(\Phi_0(\chi,\psi) - m_a u_E^{(0)2}/(2e_a))/((m_a V^2)(\hat{n}_{\parallel}\cdot\vec{\nabla}\ln B))](\hat{n}_{\parallel}\cdot\vec{\nabla}\ln B)V\hat{V}_{\parallel}\cdot\vec{\nabla}_V\hat{g}_a/2 \tag{3.4-10}$$

where here the term

$$V_{\parallel}\eta_a^{\perp}/V\sum_j^1[U_{\perp a1j}^{\chi}\bar{L}_j^{-3/2}(x_a^2) - \langle n_a U_{\perp a1j}^{\chi}L_j^{3/2}(x_a^2)\vec{B}\cdot\hat{n}_{\parallel}\rangle B/(n_a\langle B^2\rangle)]F_a - V_{\parallel}/V(1 - \eta_a^{s}/\eta_a^{\perp})/V^2[U_{a1}^{V}(V) - \langle n_a\vec{B}\cdot\vec{U}_{a1}^{V}(V)\rangle/(n_a\langle B^2\rangle^{1/2})]F_a - \sum_b 2\vec{V}_{\parallel}/(Vv_{ta}^2)\cdot[(\vec{S}_{ab}^{(1)}(V) + \vec{S}_{aB}^{(1)}(V)) - \langle n_a\vec{B}\cdot(\vec{S}_{ab}^{(1)}(V) + \vec{S}_{aB}^{(1)}(V))\hat{n}_{\parallel}\rangle/(n_a\langle B^2\rangle^{1/2})]F_a \tag{3.4-11}$$

has been neglected since in the large aspect ratio limit, (i.e. $\varepsilon = r/R << 1$) which is applicable to most present generation tokamaks, this term is an order ε smaller than the other terms appearing in eq.(3.4-10).

To compare eq.(3.4-10) to that obtained by various other authors, observe that if the field response component of the collision operator and the beam collision operator in eq.(3.4-9) for $J_a(\psi,V)$ were neglected then the resulting equation for $\hat{g}_a$ would be the same expression (to within the context of their notation) as that obtained by Wong and Burell [59] in their extension of the neoclassical transport of tokamak plasmas in the plateau regime for a strongly rotating plasma. In addition if the angular frequency of rotation in eq.(3.4-11) was also set to zero, then the resulting equation would be similar in content to that obtained by Hazeltine and Ware [45] in their analysis of an impure plasma with substantial poloidal variations of the electrostatic potential within a magnetic surface. In the more complete analysis carried out in this thesis, both the direct beam collisional interactions with the background plasma and the indirect beam induced collisional momentum and energy field restoration effects are retained in formulating the functional structure of the particle distribution function for a strongly rotating beam injected plasma in this regime.

To solve eq.(3.4-10), the conventional techniques of neoclassical transport in the plateau regime are utilized in that a coordinate transformation from $V_{\parallel}$ to $\alpha = (V_{\parallel}/V)(\eta_a^{\pm}/\omega_{ta})^{-1/3}$ is made thereby implying that $\alpha \sim O(\delta^1)$ for resonant particles. Upon neglecting terms of order $(V_{\parallel}/V)^2$

$\sim (\eta_a^{\perp}/\omega_{ta})^{2/3}$, making the desired coordinate transformation and using the large aspect ratio approximation yields the following differential equation [38,39]:

$$1/2\partial^2\hat{K}_a/\partial\alpha^2 + \gamma\sin\theta\partial\hat{K}_a/\partial\alpha = \alpha\partial\hat{K}_a/\partial\theta - \sin\theta \tag{3.4-12}$$

where $\hat{g}_a$ is related to $\hat{K}_a$ via the expression

$$\hat{g}_a = \varepsilon[1 + e_a(<\Phi_0(\psi,\theta)> - m_aR_0^2(\psi)\omega_{-1}^2(\psi)/(2e_a))/(m_aV^2)]$$
$$J_a(\psi,V)\hat{K}_a/(2(\eta_a^{\perp}/\omega_{ta})^{1/3}) \tag{3.4-13}$$

and the smallness parameter γ is a measure of the influence of the mirroring force and the effective electrostatic potential on the resonant particles in the plateau regime and is defined such that

$$\gamma = \varepsilon(\eta_a^{\perp}/\omega_{ta})^{-2/3}[1 + 2e_a(<\Phi_0(\psi,\theta)> - m_aR_0^2(\psi)\omega_{-1}^2(\psi)/(2e_a))$$
$$/(m_aV^2)]. \tag{3.4-14}$$

Note here that in obtaining eq.(3.4-12) the cosine component arising from the poloidal variations of the zeroth order electrostatic potential has been neglected since it is an order $\varepsilon = r/R$ smaller than the other terms appearing in this equation. Furthermore in constrast to the slowly

rotating case, the mirroring parameter is energy dependent, and therefore a function of the centrifugal and electrostatic potentials. This result is a direct consequence of strong plasma rotation. Physically, eq.(3.4-12) states that the free streaming motion of the particles in the frame moving with the plasma are resonantly interrupted by collisional interactions with the mirroring force and effective electrostatic potential acting as a perturbation. In adherence to the existing literature, the function $\hat{K}_a$ can be expanded in a perturbation series of the form [38,39]:

$$\hat{K}_a = \hat{K}_{a(0)} + \gamma\hat{K}_{a(1)} + \gamma^2\hat{K}_{a(2)} + \cdots . \tag{3.4-15}$$

Inserting this expansion series into eq.(3.4-12) and solving for the lowest order component (i.e. $\gamma = 0$) yields the well known resonance function [38,39,67,71]

$$\hat{K}_{a(0)} = \int_0^\infty \sin(\theta - \alpha\tau)e^{-\tau^3/6}d\tau \ . \tag{3.4-16}$$

The next order solution can be found by combining eqs.(3.4-14) through (3.4-16) with eq.(3.4-12) to give

$$\partial^2\hat{K}_{a(1)}/\partial\alpha^2 + \partial/\partial\alpha[\int_0^\infty[\cos(\alpha\tau) - \cos(2\theta - \alpha\tau)]e^{-\tau^3/6}d\tau$$
$$= 2\alpha\partial\hat{K}_{a(1)}/\partial\theta - 2\sin\theta\partial\hat{K}_{a(0)}/\partial\alpha \ . \tag{3.4-17}$$

Now for most cases of interest $\gamma/\varepsilon = [1 + 2e_a/(m_a V^2)(\langle\Phi_0\rangle - m_a R_0^2(\psi)\omega_{-1}^2(\psi)/(2e_a))]/(\eta_a^{\perp}/\omega_{ta})^{2/3} >> 1$, consequently only that component of $\hat{K}_{a(1)}$ which is uniform on the flux surface will make a significant contribution to the friction-flow constitutive relationship in this regime. Since it is those driving terms which are independent of the poloidal angle which give rise to the flux surfaced averaged component of $\hat{K}_{a(1)}$, then it follows that

$$\partial\hat{\bar{K}}_{a(1)}/\partial\alpha + \int_0^\infty \cos(\alpha\tau)e^{-\tau^3/6}d\tau = 0 \tag{3.4-18}$$

where $\hat{\bar{K}}_a = \langle\hat{K}_a\rangle$. The solution to this equation can be obtained by integration with the result [39]:

$$\hat{\bar{K}}_{a(1)} = -\int_0^\infty \sin(\alpha\tau)e^{-\tau^3/6}d\tau/\tau \ . \tag{3.4-19}$$

The total solution to the $O(\delta^1)$ kinetic equation in the plateau regime, can be obtained by combining eqs.(3.4-13), (3.4-16) (3.4-19) with eq.(3.4-7) to give

$$\hat{f}_{a1} = 2\vec{V}_{\parallel}/v_{ta}^2\cdot(\sum_j^1 U_{\perp a1j}^{\chi}\bar{L}_j^{3/2}(x_a^2)F_a\hat{n}_{\parallel}) + (B/\langle B^2\rangle^{1/2} + D[\sin\theta - \alpha\tau) - \gamma\sin(\alpha\tau)/\tau])J_a(\psi,V)(\hat{n}_{\parallel}\cdot\hat{V})F_a/n_a + \hat{U}_a^{\chi}*F_a \tag{3.4-20}$$

where the integral operator $D[A(V)]$ is defined such that

$$D[A(\alpha)] = \varepsilon V[1 + e_a(\langle\Phi_0(\theta\ \psi)\rangle - m_a R_0^2(\psi)\omega_{-1}^2(\psi)/(2e_a))/(m_a V^2)]$$
$$/(2V_{\parallel}(\eta_a^{\perp}/\omega_{ta})^{1/3}))\int_0^{\infty} A(\alpha)e^{-\tau^3/6}d\tau \ . \tag{3.4-21}$$

Following suit with section 3.3 of this chapter, eq.(3.4-20) can be multiplied by $\vec{B}\cdot\vec{V}/(2x_a^2\langle B^2\rangle^{1/2})$, integrated over all solid angles in velocity space and flux surface averaged to give

$$\langle n_a\vec{B}\cdot\vec{U}_{a1}^{V}(V)/(2x_a^2\langle B^2\rangle^{1/2})\rangle = \sum_j{}^{1}-(\langle n_a BU_{\perp a1j}^{\chi}\bar{L}_j^{3/2}(x_a^2)/\langle B^2\rangle^{1/2}\rangle$$
$$\bar{f}_T^p\eta_a^{\perp}/\bar{\eta}_a^p) + \sum_b(\langle n_a\vec{B}\cdot[\vec{S}_{ab}^{(1)}(V) + \vec{S}_{aB}^{(1)}(V)]/\langle B^2\rangle^{1/2}\rangle(1 - \bar{f}_T^p)/\bar{\eta}_a^p) \tag{3.4-22}$$

where

$$\bar{f}_T^p = \langle f_T^p\rangle \tag{3.4-23}$$

and

$$\bar{\eta}_a^p = \langle\eta_a^p\rangle \tag{3.4-24}$$

Here

$$f_T^p = 3\pi\varepsilon^2\omega_{ta}/(16\eta_a^{\perp})\gamma[1 + e_a(\langle\Phi_0(\chi,\psi)\rangle - m_a R_0^2(\psi)\omega_{-1}^2(\psi)/(2e_a))$$
$$/(m_a V^2)] \tag{3.4-25}$$

is the fraction of resonant particles and

$$\eta_a^s = (1 - \bar{f}_T^p)\eta_a^s + \bar{f}_T^p \eta_a^{\perp} \tag{3.4-26}$$

is a modified neoclassical collision frequency [39]. It is of interest to note that the fraction of trapped resonant particles is energy dependent in the presence of strong rotation and is proportional to the product

$$\bar{f}_T^p \cong [(\sqrt{\varepsilon})(\tau_a^*)(1 + 2e_a/(m_a V^2)[\langle\Phi_0(\chi,\psi)\rangle - m_a R_0^2(\psi)\omega_{-1}^2(\psi) /(2e_a)])^2] \tag{3.4-27}$$

where

$$\tau_a^* = (\omega_{ta}/\eta_a^{\perp})\varepsilon^{3/2} \quad . \tag{3.4-28}$$

In essence the first term in the above expression represents the fraction of trapped particles whereas the second term denotes the fraction of time that the particles are trapped in the magnetic well. The third term, which arises as a consequence of strong rotation, represents a correction to the conventional trapped particle population due to the electrostatic and centrifugal potentials. With respect to the latter term, it is noteworthy that the beam induced effects can signficantly modify the total fraction of resonant particles as the particle kinetic energy varies

in relation to the effective potential. In particular, if $2e_a/m_a(<\Phi_0(\theta,\psi)> - m_a R_0^2\omega_{-1}^2/(2e_a)) >> V^2$, then the fraction of resonant particles diminshes in relation to the conventional value. Finally it is to be noted that in obtaining eq.(3.4-22) to the lowest order approximation in the large aspect ratio limit

$$<1 - f_T^p B^2/<B^2>> \cong <1 - f_T^p> + \text{higher order terms in } \varepsilon$$

$$\cong 1 - <f_T^p> + \text{higher order terms in } \varepsilon \,. \tag{3.4-29}$$

In view of eqs.(3.4-20) and (3.4-22), the desired $O(\delta^1)$ solution can be expressed in the conventional form [39]:

$$\hat{f}_{a1} = \hat{f}_{a1}^{(1)} + \hat{f}_{a1}^{(2)} \tag{3.4-30}$$

where

$$\hat{f}_{a1}^{(1)} = 2\vec{V}_{\parallel}/v_{ta}^2 \cdot \sum_j^1 (1 - c_j^p V_j^{p*}) U_{\perp a1j}^{X} \bar{L}_j^{3/2}(x_a^2) F_a \hat{n}_{\parallel} + 2\vec{V}_{\parallel}/v_{ta}^2 \cdot ($$

$$V_a^{p*}\vec{N}_a(\psi,V))F_a/n_a \tag{3.4-31}$$

and

$$\hat{f}_{a1}^{(2)} = 2x_a^2 P_2(V_{\parallel}/V) J_a(\psi,V) I_a^p F_a/n_a + \hat{f}_{a1}^{*(2)} \tag{3.4-32}$$

with

$$\hat{f}^{*(2)}_{a1} = \hat{U}^{\chi}_{a}{*}F_a \tag{3.4-33}$$

$$c^{p}_{j} = c^{B}_{j}B/\langle B^2\rangle^{1/2} = \langle n_a B U^{\chi}_{\perp a1j}\bar{L}^{3/2}_{j}(x^2_a)\rangle B/(n_a U^{\chi}_{\perp a1j}\bar{L}^{3/2}_{j}(x^2_a)\langle B^2\rangle) \tag{3.4-34}$$

$$V^{p}_{j}{*} = \vec{B}\cdot(\hat{n}_{\parallel} - \vec{V}^{p}_{a})\eta^{s}_{a}/(\bar{\eta}^{p}_{a}\langle B^2\rangle^{1/2}) \tag{3.4-35}$$

$$\vec{V}^{p}_{a} = 4Vf^{p}_{T}D[\sin(\alpha\tau)/\tau]/(3\pi\epsilon V_{\parallel}(\omega_{ta}/\eta^{\perp}_{a})^{1/3})\hat{n}_{\parallel} \tag{3.4-36}$$

and

$$I^{p}_{a} = (\hat{n}_{\parallel}\cdot\hat{V})D[\sin(\theta - \alpha\tau)]/(2x^2_a P_2(V_{\parallel}/V)(\hat{n}_{\parallel}\cdot\vec{\nabla}B)) \ . \tag{3.4-37}$$

In order to formulate constitutive relationships for the collisional friction moments and the viscosity stress tensor, it more convenient to cast the expressions for the $\ell = 1$ and $\ell = 2$ harmonic components of the particle distribution function in terms of the hydrodynamic flows. In particular, the $\ell = 1$ harmonic component of $\hat{f}_{a1}$ can be reformulated in terms of the hydrodynamic flows by selecting the $V_{\parallel}\bar{L}^{3/2}_{j}(x^2_a)/(n_a\{[\bar{L}^{3/2}_{j}]^2\})$ moments of eq. (3.4-31) for j = 0,1 to give

$$\vec{U}_{\parallel a1j} = \sum_{k}^{1}(c^{j}_{ak}U^{\chi}_{\perp a1j} + M^{j}_{a})\hat{n}_{\parallel} \tag{3.4-38}$$

where

$$c_{ak}^{j} = \{\bar{L}_j^{3/2}(x_a^2)\bar{L}_k^{3/2}(x_a^2)[1 - (1 - \bar{f}_T^p)c_k^p\eta_a^s B/(\bar{\eta}_a^p\langle B^2\rangle^{1/2})]\}$$
$$/\{[\bar{L}_j^{3/2}(x_a^2)]^2\} \tag{3.4-39}$$

and

$$M_a^j = \{(1 - \bar{f}_T^p)N_a(\psi,V)\bar{L}_j^{3/2}(x_a^2)B/(n_a\bar{\eta}_a^p\langle B^2\rangle^{1/2})\}/\{[\bar{L}_j^{3/2}(x_a^2)]^2\} \quad . \tag{3.4-40}$$

Using eq.(3.4-38) in conjunction with eq.(3.4-31) yields the desired result, namely

$$\hat{f}_{a1}^{(1)} = 2\vec{V}_{\parallel}/v_{ta}^2 \cdot \sum_j^1 \vec{U}_{\parallel a1j}\bar{L}_j^{3/2}(x_a^2)F_a + \hat{f}_{a1}^{*(1)} \tag{3.4-41}$$

where the distortion function $\hat{f}_{a1}^{*(1)}$ is defined such that

$$\hat{f}_{a1}^{*(1)} = 2\vec{V}_{\parallel}/v_{ta}^2 \cdot \sum_j^1 \vec{U}_{\parallel a1j}\bar{L}_j^{3/2}(x_a^2)C_{aj}^{p*}F_a \tag{3.4-42}$$

with

$$C_{aj}^{p*} = \sum_\ell^1([(\bar{f}_T^p c_\ell^p \bar{L}_\ell^{3/2}(x_a^2)\eta_a^\perp/\bar{\eta}_a^p) - \{\bar{f}_T^p c_\ell^p \bar{L}_\ell^{3/2}(x_a^2)\eta_a^\perp/\bar{\eta}_a^p\}]\delta_{j,0} -$$
$$[\{[\bar{L}_j^{3/2}(x_a^2)]^2\}\langle B^2\rangle/B^2 + (c_j^p\bar{L}_j^{3/2}(x_a^2)(\{(\bar{L}_j^{3/2}(x_a^2))^2\}/\bar{L}_j^{3/2}(x_a^2))$$
$$(1 - \langle B^2\rangle/(c_\ell^p B^2))) - \{\bar{f}_c^p c_\ell^p \bar{L}_j^{3/2}(x_a^2)\bar{L}_\ell^{3/2}(x_a^2)\eta_a^s/\bar{\eta}_a^p\}]\delta_{j,1})U_{\perp a1}^{\chi}$$
$$B^2/(U_{\parallel a1j}\langle B^2\rangle) + [(\bar{f}_c^p N_a(\psi,V)\bar{L}_j^{3/2}(x_a^2)\eta_a^s B/(n_a\bar{\eta}_a^p\langle B^2\rangle^{1/2}U_{\parallel a1j}))$$
$$\delta_{j,0} - \{\bar{f}_c^p N_a(\psi,V)\bar{L}_j^{3/2}(x_a^2)\eta_a^s B/(n_a\bar{\eta}_a^p\langle B^2\rangle^{1/2}U_{\parallel a1j})\}] + [(\bar{L}_\ell^{3/2}(x_a^2)$$

$$\eta_a^s/\bar{\eta}_a^p - N_a(\psi,V)\bar{L}_j^{3/2}(x_a^2)\eta_a^s\langle B^2\rangle^{1/2}\delta_{j,0}/(n_a\bar{\eta}_a^p BU_{\perp a1\ell}^{\chi}))B^2/\langle B^2\rangle -$$

$$c_\ell^p V_a^{p*}\delta_{\ell,j}(\bar{L}_\ell^{3/2}(x_a^2) - N_a(\psi,V)\eta_a^s\langle B^2\rangle^{1/2}/(n_a c_\ell^p\bar{\eta}_a^p BU_{\perp a1}^{\chi}))U_{\perp a1\ell}^{\chi}$$

$$/U_{\parallel a1j})/\{[\bar{L}_j^{3/2}(x_a^2)]^2\} \quad . \tag{3.4-43}$$

To reconstruct the $\ell = 2$ harmonic component of $\hat{f}_{a1}$, the same argument given in section 3.3 of this chapter can be used to effectively decouples the parallel stress forces for the (a) species from the flow fields of the other plasma species (recall that the localized pitch angle effects, which are the dominant neoclassical collisional effects in this regime, are encompassed in the higher order term $\hat{g}_a$). As a result, it suffices to express the collisional response velocity function $J_a(\psi,V)$ in a two term Laguerre series of order 3/2 [67,71]:

$$J_a(\psi,V) = 2V/v_{ta}^2 \sum_j^1 c_{aj}^{\chi}(\psi)\bar{L}_j^{3/2}(x_a^2) \quad . \tag{3.4-44}$$

Using this expansion series in eq.(3.4-7) for $J_a(\psi,V)$, selecting the $V_\parallel\bar{L}_j^{3/2}(x_a^2)/(n_a\{[\bar{L}_j^{3/2}]^2\})$ moments of the resulting expression, neglecting the smaller order localized pitch angle terms and solving for the expansion coefficients yields

$$c_{aj}^{\chi}(\psi) = (n_a)^j U_{a1j}^{\chi}\langle B^2\rangle^{1/2} \tag{3.4-45}$$

and therefore the $\ell = 2$ harmonic of $\hat{f}_{a1}$ assumes the

general form:

$$\hat{f}_{a1}^{(2)} = 2x_a^2 P_2(V_\parallel/V) \sum_j^1 U_{a1j}^{\chi} \bar{L}_j^{3/2}(x_a^2) A_a^{p*} (\hat{n}_\parallel \cdot \vec{\nabla} B) F_a / n_a^{(1-j)} + \hat{f}_{a1}^{*(2)} \tag{3.4-46}$$

where

$$A_a^{p*} = I_a^p \langle B^2 \rangle^{1/2} \quad . \tag{3.4-47}$$

It is of interest to note that with the exception of the appearance of the distortion function $\hat{f}_{a1}^{*(2)}$, which arises from the radial gradient in the toroidal angular velocity, eq.(3.4-46) is equivalent in form to that obtained by Stacey and Sigmar [67] in their calculation of the parallel viscous force in the plateau regime for a strongly rotating plasma.

3.5 THE LOWEST ORDER FRICTION-FLOW AND PARALLEL STRESS CONSTITUTIVE RELATIONSHIPS

In order to functionally quantify the cross field particle and heat fluxes in terms of the thermodynamic forces, the collisional and heat flux generation operators, and the external momentum and energy flux source terms must be expressed in terms of the hydrodynamic and beam flows. As a result, friction-flow constitutive relationships must be developed for these operators in terms of the hydrodynamic and beam flows thereby providing the necessary closure relationships. Furthermore to express the hydrodynamic and beam flows exclusively in terms of the thermodynamic forces and effective electrostatic potential, constitutive relationships for the parallel stress forces are needed to express the arbitrary surface functions U^{χ}_{alj} in terms of the radial gradients of the thermodynamic forces and effective electrostatic potential. In this section, the flux surface averaged friction-flow and parallel stress constitutive relationships are developed for a strongly rotating beam injected plasma.

To obtain a general expression for the friction-flow constitutive relationships, eqs.(2.3-36), and (2.3-54) can be combined with eq.(2.5-2) and the result flux surface averaged to give

$$<\vec{F}_{a(j+1)}> = - \sum_b [<m_a \int_{\vec{V}} \eta^s_{ab} \vec{V} \bar{L}_j^{3/2}(x_a^2) f_{a1}^{(1)} d^3V> - <2m_a c^s_{ab}/v^2_{ta} \int_{\vec{V}} \eta^s_{ab} \bar{L}_j^{3/2}(x_a^2) \vec{V}\vec{V}\cdot\vec{R}_{(a0,b1)_1} F_a d^3V> - <2m_a c^Q_{ab}/v^2_{ta} \int_{\vec{V}} \eta^Q_{ab} x_a^2 \bar{L}_j^{3/2} (x_a^2) \vec{V}\vec{V}\cdot\vec{R}_{(a0,b1)_3} F_a d^3V> - <2m_a c^K_{ab}/v^2_{ta} \int_{\vec{V}} \eta^K_{ab} x_a^2 \bar{L}_j^{3/2}(x_a^2) \vec{V}\vec{V}\cdot\vec{R}_{(a0,b1)_3} F_a d^3V>] .$$

(3.5-1)

Furthermore, upon exploiting the momentum conservation property of the Fokker-Planck operator yields:

$$<\vec{F}_{a(j+1)}> = - \sum_b [<m_a \int_{\vec{V}} \eta^s_{ab} \vec{V} \bar{L}_j^{3/2}(x_a^2) f_{a1}^{(1)} d^3V> - <m_b \int_{\vec{V}} \eta^s_{ba} \vec{V} \bar{L}_j^{3/2} (x_b^2) f_{b1}^{(1)} d^3V> \delta_{j,0} - <m_a n_a (c^s_{ab} \{\eta^s_{ab} \bar{L}_j^{3/2}(x_a^2)\} \vec{R}_{(a0,b1)_1} + c^Q_{ab} \{\eta^Q_{ab} x_a^2 \bar{L}_j^{3/2}(x_a^2)\} \vec{R}_{(a0,b1)_3} + c^K_{ab} \{\eta^K_{ab} x_a^2 \bar{L}_j^{3/2}(x_a^2)\} \vec{R}_{(a1,b0)_3})> \delta_{j,1}] .$$

(3.5-2)

Now since the collision operator is rotationally symmetric in velocity space, then this operator can be decomposed into components which are soley a function of the gyroangle dependent (classical) component and gyrotropic (neoclassical) component of the particle distribution function, i.e.

$$<\vec{F}_{a(j+1)}> = <(\hat{n}_{\parallel} \times \vec{F}_{a(j+1)}) \times \hat{n}_{\parallel}> + <(\hat{n}_{\parallel} \cdot \vec{F}_{a(j+1)})\hat{n}_{\parallel}> \ . \tag{3.5-3}$$

Here, the classical component of the collisional and heat friction moments are computed in Appendix G and therefore will not be pursued in this section.

To develop the neoclassical component of the friction-flow constitutive relationships, the parallel component of eq.(3.5-3) can be used in conjunction with the functional structure of the $\ell = 1$ harmonic component of the neoclassical particle distribution function in all collision frequency regimes of interest. In particular, as shown in the previous sections of this chapter, the $\ell = 1$ harmonic component of the particle distribution function assumes the general form

$$\hat{f}^{(1)}_{a1} = 2\vec{V}_{\parallel}/v^2_{ta} \cdot \sum_j^1 \vec{U}_{\parallel a1j} \bar{L}^{3/2}_j (x^2_a) F_a + \hat{f}^{(1)*}_{a1} \tag{3.5-4}$$

where the distortion function $\hat{f}^{*(1)}_{a1}$ encompasses the collision frequency regime dependence of the particle distribution function. Therefore upon combining eq.(3.5-4) with the parallel component of eq.(3.5-3), then in view of eqs.(3.2-24), (3.3-71) and (3.4-41) it follows that

$$<(\hat{n}_{\parallel} \cdot \vec{F}_{a(j+1)})\hat{n}_{\parallel}> = -\sum_{b\ell}^{1}\sum <(\gamma^{j\ell}_{ab} + \gamma^{j\ell}_{ab}{}^{*})\vec{U}_{\parallel b1}> \tag{3.5-5}$$

where

$$\langle \gamma_{ab}^{j\ell}\vec{U}_{"b1\ell}\rangle = \langle m_a n_a[\{\eta_{ab}^{s}\bar{L}_j^{3/2}(x_a^2)\bar{L}_\ell^{3/2}(x_a^2)\zeta_{ab}^{\ell}\} - (m_b n_b/(m_a n_a))[$$

$$\{\eta_{ba}^{s}\bar{L}_j^{3/2}(x_b^2)\bar{L}_\ell^{3/2}(x_b^2)\}\delta_{j,0} + \{\eta_{ab}^{s}\bar{L}_j^{3/2}(x_a^2)\}\{\eta_{ba}^{s}\bar{L}_\ell^{3/2}(x_b^2)\}\delta_{j,1}$$

$$/\{\eta_{ab}^{s}\}] - (p_b/p_a)\{\eta_{ab}^{Q}x_a^2\bar{L}_j^{3/2}(x_a^2)\}\{\eta_{ba}^{Q}x_b^2\bar{L}_\ell^{3/2}(x_b^2)\}\delta_{j,1}/\{\eta_{ab}^{Q}x_a^4\}$$

$$- \{\eta_{ab}^{K}x_a^2\bar{L}_j^{3/2}(x_a^2)\}\{\eta_{ab}^{K}x_a^2\bar{L}_\ell^{3/2}(x_a^2)\zeta_{ab}^{\ell}\}\delta_{j,1}/\{\eta_{ab}^{K}x_a^4\}]\vec{U}_{"b1\ell}\rangle$$

(3.5-6)

and

$$\langle \gamma_{ab}^{j\ell *}\vec{U}_{"b1\ell}\rangle = \langle 2m_a[\int_{\vec{V}}\eta_{ab}^{s}x_a^2C_{a\ell}^{i*}\bar{L}_j^{3/2}(x_a^2)\bar{L}_\ell^{3/2}(x_a^2)(\cos\theta)^2F_a d^3V\,\zeta_{ab}^{\ell} -$$

$$(m_b/m_a)[\int_{\vec{V}}\eta_{ba}^{s}x_b^2C_{b\ell}^{i*}\bar{L}_j^{3/2}(x_b^2)\bar{L}_\ell^{3/2}(x_b^2)(\cos\theta)^2F_b d^3V\delta_{j,0} + \{\eta_{ab}^{s}\bar{L}_j^{3/2}(x_a^2)$$

$$\int_{\vec{V}}\eta_{ba}^{s}x_b^2C_{b\ell}^{i*}\bar{L}_\ell^{3/2}(x_b^2)(\cos\theta)^2F_b d^3V\delta_{j,1}/\{\eta_{ab}^{s}\}] - (T_b/T_a)\{\eta_{ab}^{Q}x_a^2\bar{L}_j^{3/2}$$

$$(x_a^2)\}\int_{\vec{V}}\eta_{ba}^{Q}x_b^4C_{b\ell}^{i*}\bar{L}_\ell^{3/2}(x_b^2)(\cos\theta)^2F_b d^3V\delta_{j,1}/\{\eta_{ab}^{Q}x_a^4\} - \{\eta_{ab}^{K}x_a^2\bar{L}_\ell^{3/2}$$

$$(x_a^2)\}\int_{\vec{V}}\eta_{ab}^{K}x_a^4C_{a\ell}^{i*}\bar{L}_\ell^{3/2}(x_a^2)(\cos\theta)^2F_a d^3V\delta_{j,1}/\{\eta_{ab}^{K}x_a^4\}]\vec{U}_{"b1\ell}\rangle$$

(3.4-7)

with

$$\zeta_{ab}^{\ell} = (U_{"a1\ell}/U_{"b1\ell}) .$$

Here i = C,B or P represents the various collision frequency regimes. Note that the first term in eq.(3.5-6) is similar in nature to that of the conventional [8] expression for the friction-flow constitutive relationship, whereas the

second term represents a distortion or perturbation to the conventional relationship due to the structure of the various collision frequency regimes and the effects of collisional interactions of the beam particles with the background plasma (the latter effect is actually encompassed in the distortion coefficients $C^{i}_{a\ell}{}^{*}$).

To gain some insight into the content of eq.(3.5-7), a calculation of the lowest order parallel collisional friction moment (i.e. j = 0) is made for the physically relevant case of a beam injected mixed regime plasma in which the dominant hydrogenic ion resides in the banana regime. For the sake of clarity, suppose that the plasma consists of two species system (excluding the beam ions) in which the second species is a collisional impurity ion. In this case

$$<I\hat{n}_{\parallel}\cdot\vec{R}_{iz}/B> = -\sum_{\ell}^{1}[(<I\gamma^{0\ell}_{iz}U_{\parallel i1\ell}/B> - <I\gamma^{0\ell}_{zi}U_{\parallel z1\ell}/B>) + (<I\gamma^{0\ell}_{iz}{}^{*}U_{\parallel i1\ell}/B> - <I\gamma^{0\ell}_{zi}{}^{*}U_{\parallel z1\ell}/B>)] \quad . \tag{3.5-8}$$

Now to calculate the distortion component of eq.(3.5-8), eqs.(3.2-27) and (3.3-73) can be used in conjunction with eq.(2.5-23) for j = 0 to give

$$<I\gamma^{0\ell}_{iz}{}^{*}U_{\parallel i1\ell}/B> \cong \sum_{km}^{11}\sum(\upsilon^{\ell km}_{iz}<n_i IU^{\chi}_{\perp i1\ell}/B> + \mu^{\ell km}_{iz}<(n_i)^{\ell} IU^{\chi}_{i1\ell}> + \gamma^{\ell km}_{iz}<n_i IV_{\parallel B}/B>) \tag{3.5-9}$$

and

$$<I\gamma_{zi}^{0\ell}{}^{*}U_{\text{"}z1\ell}/B> \approx \sum_{km}^{11}\sum (\upsilon_{zi}^{\ell km}<n_z IU_{\perp z1\ell}^{\chi}/B> + \mu_{zi}^{\ell km}<(n_z)^{\ell} IU_{z1\ell}^{\chi}> + \gamma_{zB}^{\ell km}<n_z IV_{\text{"}B}/B>)$$

(3.5-10)

where

$$\upsilon_{iz}^{\ell km} \approx m_i/\{[\bar{L}_\ell^{3/2}(x_i^2)]^2\}[\{\bar{\eta}_{iz}^{s}\bar{L}_\ell^{3/2}(x_i^2)[(\bar{f}_T^B\bar{c}_k^B\bar{L}_k^{3/2}(x_i^2)\bar{\eta}_i^{\perp}/\bar{\eta}_i^B - \{\bar{f}_T^B\bar{c}_k^B\bar{L}_k^{3/2}(x_i^2)\bar{\eta}_i^{\perp}/\bar{\eta}_i^B\})\delta_{m,k}\delta_{\ell,0} - (\{\bar{L}_\ell^{3/2}(x_i^2)\bar{L}_\ell^{3/2}(x_i^2)\} + \bar{c}_\ell^B \bar{L}_\ell^{3/2}(x_i^2)(\{[\bar{L}_\ell^{3/2}(x_i^2)]^2\}/\bar{L}_\ell^{3/2}(x_i^2))(1 - 1/\bar{c}_\ell^B) - \{\bar{f}_c^B\bar{c}_k^B\bar{L}_k^{3/2}(x_i^2)\bar{L}_\ell^{3/2}(x_i^2)\bar{\eta}_i^s/\bar{\eta}_i^B\})\delta_{m,k}\delta_{\ell,1} + (\bar{f}_c^B\bar{L}_\ell^{3/2}(x_i^2)[\bar{A}_{ii}^{km} + \bar{D}_{ii}^{km}]\delta_{\ell,0}/\bar{\eta}_i^B - \{\bar{f}_c^B\bar{L}_\ell^{3/2}(x_i^2)[\bar{A}_{ii}^{km} + \bar{D}_{ii}^{km}]/\bar{\eta}_i^B\})]\} - m_z\bar{n}_z/(m_i\bar{n}_i)\{\bar{\eta}_{zi}^{s}\bar{L}_\ell^{3/2}(x_z^2)[(1/\bar{\eta}_z^s(\{\bar{L}_1^{3/2}(x_z^2)/\hat{\bar{\eta}}_z^s\}/(\{[\bar{L}_k^{3/2}(x_z^2)]^2/\hat{\bar{\eta}}_z^s\}))(\delta_{\ell,0}\delta_{k,1} + \delta_{\ell,1}\delta_{k,0}) - \delta_{k,\ell})(\{\bar{A}_{iz}^{km}/\hat{\bar{\eta}}_z^s\}) + \{[\bar{L}_k^{3/2}(x_z^2)]^2\delta_{k,\ell}/\hat{\bar{\eta}}_z^s\}(1 - \{\bar{L}_1^{3/2}(x_z^2)/\hat{\bar{\eta}}_z^s\}^2/(\{1/\hat{\bar{\eta}}_z^s\}\{[\bar{L}_1^{3/2}(x_z^2)]^2/\hat{\bar{\eta}}_z^s\}))(\bar{A}_{iz}^{km}))\{[\bar{L}_\ell^{3/2}(x_i^2)]^2\}/(\{[\bar{L}_k^{3/2}(x_z^2)]^2\delta_{k,\ell}/\hat{\bar{\eta}}_z^s\}(1 - \{\bar{L}_1^{3/2}(x_z^2)/\hat{\bar{\eta}}_z^s\}^2/(\{1/\hat{\bar{\eta}}_z^s\}\{[\bar{L}_1^{3/2}(x_z^2)]^2/\hat{\bar{\eta}}_z^s\})))]\}]$$

(3.5-11)

$$\upsilon_{zi}^{\ell km} \approx m_z/\{[\bar{L}_\ell^{3/2}(x_z^2)]^2\}[\{\bar{\eta}_{zi}^{s}\bar{L}_\ell^{3/2}(x_z^2)[(1/\bar{\eta}_z^s)(\delta_{k,\ell}\delta_{m,k} - \bar{\eta}_z^s\{[\bar{L}_k^{3/2}(x_z^2)]^2\delta_{k,\ell}/\hat{\bar{\eta}}_z^s\}(1 - \{\bar{L}_1^{3/2}(x_z^2)/\hat{\bar{\eta}}_z^s\}^2/(\{1/\hat{\bar{\eta}}_z^s\}\{[\bar{L}_1^{3/2}(x_z^2)$$

$$]^2/\hat{\bar{\eta}}^s_z\}))\delta_{m,k} - (\{\bar{L}^{3/2}_1(x^2_z)/\hat{\bar{\eta}}^s_z\}/\{[\bar{L}^{3/2}_k(x^2_z)]^2/\hat{\bar{\eta}}^s_z\})(\delta_{\ell,0}\delta_{k,1} +$$

$$\delta_{\ell,1}\delta_{k,0})\delta_{m,k} + ((\{\bar{L}^{3/2}_1(x^2_z)/\hat{\bar{\eta}}^s_z\}/\{[\bar{L}^{3/2}_k(x^2_z)]^2/\hat{\bar{\eta}}^s_z\})(\delta_{\ell,0}\delta_{k,1}$$

$$+ \delta_{\ell,1}\delta_{k,0}) - \delta_{k,\ell})(\{[\bar{A}^{km}_{zz} + \bar{D}^{km}_{zz}]/\hat{\bar{\eta}}^s_z\}) + \{[\bar{L}^{3/2}_k(x^2_z)]^2\delta_{k,\ell}/$$

$$\hat{\bar{\eta}}^s_z\}(1 - \{\bar{L}^{3/2}_1(x^2_z)/\hat{\bar{\eta}}^s_z\}^2/(\{1/\hat{\bar{\eta}}^s_z\}\{[\bar{L}^{3/2}_1(x^2_z)]^2/\hat{\bar{\eta}}^s_z\}))(\bar{A}^{km}_{zz} + \bar{D}^{km}_{zz}))$$

$$\{[\bar{L}^{3/2}_\ell(x^2_z)]^2\}/(\{[\bar{L}^{3/2}_k(x^2_z)]^2\delta_{k,\ell}/\hat{\bar{\eta}}^s_z\}(1 - \{\bar{L}^{3/2}_1(x^2_z)/\hat{\bar{\eta}}^s_z\}^2/(\{1/$$

$$\hat{\bar{\eta}}^s_z\}\{[\bar{L}^{3/2}_1(x^2_z)]^2/\hat{\bar{\eta}}^s_z\ )))]\} - (m_i\bar{n}_i\{[\bar{L}^{3/2}_\ell(x^2_z)]^2\}/(m_z\bar{n}_z\{[\bar{L}^{3/2}_\ell$$

$$(x^2_i)]^2\}))\{\bar{\eta}^s_{iz}\bar{L}^{3/2}_\ell(x^2_i)[(\bar{f}^B_c\bar{L}^{3/2}_\ell(x^2_i)\bar{A}^{km}_{zi}\delta_{\ell,0}/\bar{\eta}^B_i - \{\bar{f}^B_c\bar{L}^{3/2}_\ell(x^2_i)$$

$$\bar{A}^{km}_{zi}/\bar{\eta}^B_i\}))]\}]$$

(3.5-12)

$$\mu^{\ell km}_{iz} = \upsilon^{\ell km}_{iz} - m_i/\{[\bar{L}^{3/2}_\ell(x^2_i)]^2\}[\{\bar{\eta}^s_{iz}\bar{L}^{3/2}_\ell(x^2_i)[(\bar{f}^B_T\bar{L}^{3/2}_k(x^2_i)$$

$$\bar{\eta}^+_i/\bar{\eta}^B_i - \{\bar{f}^B_T\bar{L}^{3/2}_k(x^2_i)\bar{\eta}^+_i/\bar{\eta}^B_i\})\delta_{m,k}\delta_{\ell,0} - (\{\bar{L}^{3/2}_\ell(x^2_i)\bar{L}^{3/2}_\ell(x^2_i)$$

$$- \{\bar{f}^B_c\bar{L}^{3/2}_k(x^2_i)\bar{L}^{3/2}_\ell(x^2_i)\bar{\eta}^s_i/\bar{\eta}^B_i\})\delta_{m,k}\delta_{\ell,1}]\}$$

(3.5-13)

$$\mu^{\ell km}_{zi} = \upsilon^{\ell km}_{zi}$$

(3.5-14)

$$\gamma^{\ell km}_{iB} = m_i/\{[\bar{L}^{3/2}_\ell(x^2_i)]^2\}[\{\bar{\eta}^s_{iz}\bar{L}^{3/2}_\ell(x^2_i)[\bar{f}^B_c\bar{L}^{3/2}_\ell(x^2_i)\bar{\gamma}^s_{iB}(V)\delta_{\ell,0}$$

$$/\bar{\eta}^B_i - \{\bar{f}^B_c\bar{L}^{3/2}_\ell(x^2_i)\bar{\gamma}^s_{iB}(V)/\bar{\eta}^B_i\}]\}]$$

(3.5-15)

and

$$\gamma_{zB}^{\ell km} = m_z/\{[\bar{L}_\ell^{3/2}(x_z^2)]^2\}[\{\bar{\eta}_{zi}^s\bar{L}_\ell^{3/2}(x_z^2)[(1/\bar{\eta}_z^s)(((\{\bar{L}_1^{3/2}(x_z^2)/\hat{\bar{\eta}}_z^s$$

$$/\{[\bar{L}_k^{3/2}(x_z^2)]^2/\hat{\bar{\eta}}_z^s\})(\delta_{\ell,0}\delta_{k,1} + \delta_{\ell,1}\delta_{k,0}) - \delta_{k,\ell})(\{\bar{\gamma}_{zB}^s(V)/\hat{\bar{\eta}}_z^s\})$$

$$+ \{[\bar{L}_k^{3/2}(x_z^2)]^2\delta_{k,\ell}/\hat{\bar{\eta}}_z^2\}(1 - \{\bar{L}_1^{3/2}(x_z^2)/\bar{\eta}_z^s\}^2/(\{1/\hat{\bar{\eta}}_z^s\}\{[\bar{L}_1^{3/2}(x_z^2)$$

$$]^2/\hat{\bar{\eta}}_z^s\}))(\bar{\gamma}_{zB}^s))\{[\bar{L}_\ell^{3/2}(x_z^2)]^2\}/(\{[\bar{L}_k^{3/2}(x_z^2)]^2\delta_{k,\ell}/\hat{\bar{\eta}}_z^s\}(1 - \{\bar{L}_1^{3/2}$$

$$(x_z^2)/\hat{\bar{\eta}}_z^s\}^2/(\{1/\hat{\bar{\eta}}_z^s\}\{[\bar{L}_1^{3/2}(x_z^2)]^2/\hat{\bar{\eta}}_z^s\})))]\}]$$

(3.5-16)

where

$$\bar{A}_{ab}^{km} = \bar{\eta}_{ab}^s\{m_b\bar{n}_b\bar{\eta}_{ba}^s\bar{L}_m^{3/2}(x_b^2)\}/\{m_a\bar{n}_a\bar{\eta}_{ab}^s\} + \bar{\eta}_{ab}^Q x_a^2\{m_b\bar{n}_b\bar{\eta}_{ba}^Q x_a^2\bar{L}_m^{3/2}(x_b^2)\}$$

$$/\{m_a\bar{n}_a\bar{\eta}_{ab}^Q x_a^4\}$$

(3.5-17)

and

$$\bar{D}_{ab}^{km} = \bar{\eta}_{ab}^K x_a^2\{\bar{\eta}_{ab}^K\bar{L}_m^{3/2}(x_a^2)\}/\{\bar{\eta}_{ab}^K x_a^4\} .$$

(3.5-18)

Note here that in obtaining the above expression the distortion component of the particle distribution function has been neglected in the evaluation of the collisional field momentum restoring term associated with the function $\hat{f}_{a1}^{*(1)}$ since only the lowest order coupling is desired. Furthermore the large aspect ratio limit, which is applicable to most present generation tokamaks which are of interest in this thesis, has been involked in obtaining a lowest order approximation to the friction coefficients. In

this context, the bar above the functions appearing in the above expressions denote quantities that are flux surface averaged or uniform on the flux surface.

Finally, combining eqs.(3.5-6) through (3.5-18) with eq.(3.5-5) and using the resulting expression in conjunction with eqs.(2.5-23) for the hydrodynamic flows yields the desired result, namely

$$<I\hat{n}_{\parallel}\cdot\vec{R}_{iz}/B> \cong -\sum_{\ell km}^{111}\sum\sum[(\nu_{iz}^{\ell km}<n_i IU_{\perp i\ell m}^{\chi}/B> - \nu_{zi}^{\ell km}<n_z IU_{\perp z\ell m}^{\chi}/B>) + (\eta_{iz}^{\ell km}<(n_i)^{\ell} IU_{i\ell m}^{\chi}> - \eta_{zi}^{\ell km}<(n_z)^{\ell} IU_{z\ell m}^{\chi}>) + (\gamma_{iB}^{\ell km}<n_i IV_{\parallel B}/B> - \gamma_{zB}^{\ell km}<n_z IV_{\parallel B}/B>)] \tag{3.5-19}$$

where

$$\nu_{iz}^{\ell km} = \gamma_{iz}^{\ell km} + \upsilon_{iz}^{\ell km} \tag{3.5-20}$$

$$\nu_{zi}^{\ell km} = \gamma_{zi}^{\ell km} + \upsilon_{zi}^{\ell km} \tag{3.5-21}$$

$$\eta_{iz}^{\ell km} = \gamma_{iz}^{\ell km} + \mu_{iz}^{\ell km} \tag{3.5-22}$$

and

$$\eta_{zi}^{\ell km} = \gamma_{zi}^{\ell km} + \mu_{zi}^{\ell km} \tag{3.5-23}$$

with

$$\gamma_{iz}^{\ell km} = \gamma_{iz}^{0\ell}\delta_{m,\ell} \tag{3.5-24}$$

and

$$\gamma_{zi}^{\ell km} = \gamma_{zi}^{0\ell}\delta_{m,\ell} \quad . \tag{3.5-25}$$

To further simplify the coefficients appearing in eqs.(3.5-20) through (3.5-25), one could make use of the mass disparity between the background ions and impurity ions. (This will indeed be done in Chapter IV of this thesis where the functional structure of the cross field flux for a mixed regime two species plasma is obtained). Similarly, friction-flow constitutive relationships can be developed for a two specie system in which the second species is also in the banana regime or in the plateau regime (See appendix I).

To develop the friction-flow constitutive relationships for the parallel component of the external momentum and energy flux source terms, the $m_a V_{\parallel} \bar{L}_j^{3/2}(x_a^2)$ moments of eq.(2.3-60) for j=0,1 can be selected to give

$$<(\hat{n}_{\parallel}\cdot\vec{W}_{a(j+1)})\hat{n}_{\parallel}> = <\lambda_{aB}^{j}\vec{V}_{\parallel B}> \tag{3.5-26}$$

where

$$\lambda_{aB}^{j} = m_a n_a\{\gamma_{aB}^{s}(V)\bar{L}_j^{3/2}(x_a^2)\} \quad . \tag{3.5-27}$$

The expression for collisional friction moment (i.e. j = 0)

can be simplified by use of the conservation of momentum

$$<(\hat{n}_{\parallel}\cdot\vec{W}_{a1})\hat{n}_{\parallel}> = -<(\hat{n}_{\parallel}\cdot\vec{W}_{B1})\hat{n}_{\parallel}> = <m_a\int_{\vec{V}}\eta^s_{Ba}\vec{V}_{\parallel}f^{(1)}_B d^3V> \tag{3.4-28}$$

where here the flow velocity of the background ions and electrons in response to the beam has been neglected in comparison with the beam velocity. Furthermore in view of the criterion $v_{ta} << v_{B0} << v_{te}$, $a\neq e$, then

$$\underset{x_a \to \infty}{\text{Limit}}\,[\eta^s_{Ba}] \to n_a m_B \Gamma_{Ba}/(m_{aB}V^3) = n_a m_a^2 \Gamma_{aB}/(m_B m_{aB} V^3) \tag{3.5-29}$$

and therefore eq.(3.5-28) becomes

$$<(\hat{n}_{\parallel}\cdot\vec{W}_{a1})\hat{n}_{\parallel}> = <\lambda^0_{Ba}\vec{V}_{\parallel B}> \tag{3.5-30}$$

where

$$\lambda^0_{Ba} = m_a^2 n_a \eta_{aB}/m_{aB}(v_{ta}/\bar{v}_B)^3 \tag{3.5-31}$$

$$\eta^s_{aB} = n_B\Gamma_{aB}/v^3_{ta} \tag{3.5-32}$$

and

$$(v_{ta}/\bar{v}_B)^3 = \int_{\vec{V}} V_{\parallel} f^{(1)}_B d^3V/x_a^3/(\int_{\vec{V}} V_{\parallel} f^{(1)}_B d^3V) \quad . \tag{3.5-33}$$

To evaluate λ^0_{Ba} , the results of Appendix H for the beam

ion distribution function can be used in conjunction with the above expression to give

$$(v_{ta}/\bar{v}_B)^3 = \int_0^1 [(1/(1 + (\alpha_c x_a)^3))^{\beta/3} dx_a/(x_a^3(1 + (\alpha_c x_a)^3))]$$
$$/\int_0^1 [(1/(1 + (\alpha_c x_a)^3))^{(\beta/3 + 1)} dx_a] \tag{3.5-34}$$

where

$$\alpha_c = v_c/v_{ta} \tag{3.5-35}$$

$$\beta = \sum_a (n_a Z_a^2/n_e)/(\sum_a (n_a Z_a^2 m_B/(n_e m_a))) \tag{3.5-36}$$

and

$$v_c = [3\sqrt{\pi}(\sum_a n_a Z_a^2 m_B/(n_e m_a))/4]^{1/3} v_{te} \tag{3.5-37}$$

being the critical electron velocity.

In the last part of this section, a general constitutive relationship for the flux surface averaged parallel component of the lowest order momentum and energy weighted stress tensors will be developed for all collision frequency regimes. To obtain the general structure of the parallel stress forces, the definition of the momentum and energy weighted stress tensors can be used in conjunction with the properties of the flux surface averaging operator to give

$$<\vec{B}\cdot\vec{\nabla}\cdot\overleftrightarrow{H}_{ak}> = <\vec{B}\cdot\vec{\nabla}\cdot[(m_a n_a (v_a^2/2)^{(k-1)} + 3T_{ak}^{(0)}\delta_{k,2})\vec{v}_a\vec{v}_a + \overleftrightarrow{T}_{ak}^{(2)} + (2[\vec{v}_a(\vec{T}_{ak}^{(1)} + \vec{v}_a\cdot\overleftrightarrow{T}_{ak}^{(2)})]_2 + (v_a^{2(k-1)}/2)\overleftrightarrow{T}_{a(k-1)}^{(2)} + \vec{v}_a\cdot\overleftrightarrow{T}_{ak}^{(3)})\delta_{k,2}]> \tag{3.5-38}$$

where here the general intrinsic stress tensor $\overleftrightarrow{T}_{ak}^{(\ell)}$ is defined such that

$$\overleftrightarrow{T}_{ak}^{(\ell)} = m_a/(2^{[k-(1+\delta_{\ell,3})]})\int_{\vec{V}}(\vec{V}\vec{V}\vec{V}\ldots\vec{V}_\ell)V^{2[k-(1+\delta_{\ell,3})]}(\hat{f}_{a1}^{(2)} + \tilde{f}_a)d^3V \tag{3.5-39}$$

for $K = 1,2$; $\ell = 0,1,2,3$ and $\overleftrightarrow{H}_{a1} = \overleftrightarrow{M}_a$ and $\overleftrightarrow{H}_{a2} = \overleftrightarrow{G}_a$ are the momentum and energy stress tensors respectively. Noting that to the lowest order approximation $\vec{v}_a \cong \vec{u}_{aE}$, then upon neglecting all terms $\geq O(\delta^2)$ in eq.(3.5-22) yields

$$<\vec{B}\cdot\vec{\nabla}\cdot\overleftrightarrow{H}_{ak}> = <[((u_{aE}^2/2)^{(k-1)} + (3T_a/(2m_a))^{(k-1)}]m_a n_a\vec{B}\vec{u}_{aE}:\vec{\nabla}\vec{u}_{aE}> + <[\delta T_{ak}^{(2)} + (u_E^{(0)2}/2)^{(k-1)}\delta T_{a(k-1)}^{(2)}\delta_{k,2}](\hat{n}_{\parallel}\cdot\vec{\nabla}B)> + <\vec{B}\cdot\vec{\nabla}\cdot[\hat{n}_{\parallel}\hat{n}_{\parallel}\times(\tilde{\vec{\Pi}}_{ak}^{(1)} + (u_E^{(0)2}/2)^{(k-1)}\tilde{\vec{\Pi}}_{a(k-1)}^{(1)}\delta_{k,2})]> \tag{3.5-40}$$

where in general

$$\delta T_{ak}^{(\ell)} = (T_{\parallel ak}^{(\ell)} - T_{\perp ak}^{(\ell)}) \tag{3.5-41}$$

with

$$T_{\parallel ak}^{(\ell)} = m_a/(2^{(k-1)})\int_{\vec{V}} V_{\parallel}^{\ell} V^{2(k-1)} \hat{f}_{a1}^{(2)} d^3V \tag{3.5-42}$$

$$T_{\perp ak}^{(\ell)} = m_a/(2^{k})\int_{\vec{V}} V_{\perp}^{\ell} V^{2(k-1)} \hat{f}_{a1}^{(2)} d^3V \tag{3.5-43}$$

and

$$\tilde{\vec{\Pi}}_{ak}^{(\ell)} = m_a/(2^{(k-2)}\Omega_a v_{ta}^2)]\,(\hat{n}_{\parallel}\cdot\vec{\nabla}\vec{u}_{aE})\int_{\vec{V}} V_{\parallel}^{\ell} V_{\perp}^{\ell} V^{2(k-1)} F_a d^3V] \tag{3.5-44}$$

for K = 1,2 and = 0,1,2,3.

In essence, the first term in eq.(3.5-40) represents the kinetic stress (inertial) contribution to the parallel stress forces whereas the second term is the conventional [8,101] neoclassical anisotropic stress component. The third term is a manifestation of the viscous drag force which arises during intense momentum injection [61]. To express this component in terms of the gyroviscous drag coefficient, eq.(2.2-49) is used in (3.5-44) to give

$$\langle\vec{B}\cdot\vec{\nabla}\cdot[\hat{n}_{\parallel}\hat{n}_{\parallel} \times \tilde{\vec{\Pi}}_{ak}^{(1)}]\rangle \cong \langle\vec{B}\cdot\hat{n}_{\phi}/R[\vec{\nabla}\cdot(I\hat{n}_{\parallel} \times \tilde{\vec{\Pi}}_{ak}^{(1)}/B]\rangle \cong \langle m_a n_a (V^2/2)^{(k-1)} \gamma_{da(1+\delta_{k,2})} \vec{B}\cdot\vec{V}\rangle \tag{3.5-45}$$

where in obtaining the lowest order approximation terms of order $(B_{\chi}/B_{\phi})^2 << 1$ have been neglected in formulating eq.(3.5-45) and the gyroviscous drag coefficient γ_{da} is

defined by eq.(2.5-8) of chapter II.

In view of eq.(3.5-40) and (3.5-45), it follows that the parallel stress forces are functionally quantified to within the term $\delta T_{ak}^{(2)}$, where

$$\delta T_{ak}^{(2)} = (2/m_a^{(k-1)})(p_a/n_a)^k \int_{\vec{V}} x_a^{2k} P_2(V_\parallel/V)\hat{f}_{a1}^{(2)} d^3V \tag{3.5-46}$$

Now in general, the $\ell = 2$ harmonic of the $O(\delta^1)$ particle distribution function in all collision frequency regimes can be expressed as follows [c.f.eqs.(3.2-39), (3.3-65) and (3.4-46)]:

$$\hat{f}_{a1}^{(2)} = 2x_a^2[P_\ell(V_\parallel/V)]^{(3-\ell)} \sum_j^1 U_{a1j}^{\chi} \bar{L}_j^{3/2}(x_a^2) A_{aj*}^i (\hat{n}_\parallel \cdot \vec{\nabla} B) F_a/n_a^{(1-j)} + \hat{f}_{a1*}^{(2)} \tag{3.5-47}$$

for the collisionality regimes $i = c,B,P$. Combining eq.(3.5-47) with (3.5-46), then in view of eqs.(3.2-45), (3.3-76) and (3.4-46)

$$\langle \delta T_{ak}^{(2)} (\hat{n}_\parallel \cdot \vec{\nabla} B) \rangle = \sum_j^1 [\langle \mu_{aj(k-1)}^i U_{a1j}^{\chi} (\hat{n}_\parallel \cdot \vec{\nabla} B)^2 \rangle + \langle \mu_{aj(k-1)}^{i*} U_{a1j}^{\chi} (\hat{n}_\parallel \cdot \vec{\nabla} B)^2 \rangle] \tag{3.5-48}$$

where

$$\mu_{aj(k-1)}^i = (6/m_a^{(k-1)})(p_a/n_a)^k (n_a)^j \{x_a^{2k} D_p [x_a^2 P_\ell^{(3-\ell)}(V_\parallel/V) A_{aj*}^i] \bar{L}_j^{3/2}(x_a^2)\} \tag{3.5-49}$$

and

$$\mu^{i_*}_{aj(k-1)} = (2/m_a^{(k-1)})(p_a/n_a)^k \int_{\vec{V}} x_a^{2k} P_2(V_\parallel/V)\hat{f}^{*(2)}_{a1} d^3V/(U^{\chi}_{a1j}(\hat{n}_\parallel\cdot\vec{\nabla}B)) \tag{3.5-50}$$

with the integral operator $D_p[K(P_\ell(V_\parallel/V))]$ is defined such that

$$D_p[K(P\ (V_\parallel/V))] = 5/2\int_0^1 P_2(\xi)K(P_\ell(\xi))d\xi\ . \tag{3.5-51}$$

Finally combining eq(3.5-48) with (3.5-40) yields the desired result, namely

$$\langle\vec{B}\cdot\vec{\nabla}\cdot\overleftrightarrow{H}_{ak}\rangle = \langle\mu^{I}_{ak}\vec{B}\vec{u}_{aE}:\vec{\nabla}\vec{u}_{aE}\rangle + \sum_{jm}^{12}\sum\langle[\delta_{m,1} + (u_E^{(0)2}/2)^{(k-1)}\delta_{k,2}\delta_{m,2}](\mu^{i}_{aj|k-m|} + \mu^{i_*}_{aj|k-m|})U^{\chi}_{a1j}(\hat{n}_\parallel\cdot\vec{\nabla}B)^2\rangle - \langle\vec{B}\cdot(\vec{\xi}_{a(2k-1)} - \vec{S}_{a(2k-1)})\rangle \tag{3.5-52}$$

where

$$\mu^{I}_{ak} = m_a n_a[(u_{aE}^2/2)^{(k-1)} + (3T_a/(2m_a))^{(k-1)}] \tag{3.5-53}$$

and

$$\vec{\xi}_{a(2k-1)} = \vec{S}_{a(2k-1)} - \sum_m^2[\delta_{m,1} + (u_E^{(0)2}/2)^{(k-1)}\delta_{k,2}\delta_{m,2}][m_a n_a(V^2/2)^{|k-m|}\gamma_{da(2k-m-\delta_{k,2}\delta_{m,2})}\vec{V}] \tag{3.5-54}$$

are the net external momentum and energy flux input terms and $S_{a(2k-1)}$ are the pure external momentum and energy flux source terms. Physically, the first term in eq.(3.5-52) represents the kinetic stress (inertial) component of the parallel stress force. The next term encompasses the conventional result for the parallel stress forces in that the parallel stress forces are damped by the poloidal component of the hydrodynamic flows. Furthermore, the second term in eq.(3.5-52) also contains a term which is proportional to the distortion component of the particle distribution function. Finally, the last term in eq.(3.6-52) represents a dissipative gyroviscous momentum drag force. In essence with the exception of the leading component of the second term in eq.(3.5-52), the terms in this equation are a consequence of strong rotation and radial viscous transfer due to intense momentum injection.

To gain some physical insight as to the content of the distortion component of eq.(3.5-52), a lowest order calculation of this component is made for the parallel ion viscosity (k = 1) for all the collision frequency regimes. Commencing with the collisional regime, then upon combining eq.(3.2-40) with (3.5-50) yields:

$$\mu^{c}_{aj0} \cong 3(p_a/n_a^{(1-j)})\{x_a^2 D_p[2x_a^2 P_1^2(V_\parallel/V)]\bar{L}_j^{3/2}(x_a^2)\}(\hat{n}_\parallel\cdot\vec{\nabla}\ln n_a)$$
$$/(\hat{n}_\parallel\cdot\vec{\nabla}\ln B) \qquad (3.5\text{-}55)$$

where here only the dominant term in the distortion component of $\hat{f}^{(2)}_{a1}$ has been retained in formulating the lowest order approximation. Physically, the lowest order distortion component of the parallel viscosity force characterizing the collisional regime arises from the poloidal variation in the ion density and therefore

$$<\mu^{C_*}_{aj0} U^{\chi}_{a1j} (\hat{n}_{\parallel} \cdot \vec{\nabla} B)^2> = <[\kappa^{C_*}_{aj} U^{\chi}_{a1j} (\hat{n}_{\parallel} \cdot \vec{\nabla} B)] (\vec{B} \cdot \vec{\nabla} \ln n_a)> \tag{3.5-56}$$

where

$$\kappa^{C_*}_{aj} = 3(p_a/n_a^{(1-j)})\{x_a^2 D_p [2x_a^2 P_1^2 (V_{\parallel}/V)] \bar{L}_j^{3/2} (x_a^2)\} . \tag{3.5-57}$$

Now with respect to the banana regime, it follows from eq.(3.3-76) and (3.5-50) that to the lowest order approximation

$$\mu^{B_*}_{aj0} = -3m_a p_a/e_a (I/B)^2 \{x_a^2 D_p [x_a^2 P_1^2 (V_{\parallel}/V)]\} (2\pi/\gamma' \partial (R^{-1} \vec{u}_E^{(0)} \cdot \hat{n}_{\phi}) /\partial\psi)/(U^{\chi}_{a1j} (\hat{n}_{\parallel} \cdot \vec{\nabla} B)) \tag{3.5-58}$$

and therefore

$$<\mu^{B_*}_{aj0} U^{\chi}_{a1j} (\hat{n}_{\parallel} \cdot \vec{\nabla} B)^2> = -<\kappa^{B_*}_{aj0} R^2 (\vec{B} \cdot \vec{\nabla} B)> (2\pi/\gamma' \partial (R^{-1} \vec{u}_E^{(0)} \cdot \hat{n}_{\phi})/\partial\psi) \tag{3.5-59}$$

where

$$\kappa^{B_*}_{aj0} = 3\eta_{da}\{x_a^2 D_p[x_a^2 P_1^2(V_\parallel/V)]\} \tag{3.5-60}$$

with

$$\eta_{da1} = p_a/\Omega_a \tag{3.5-61}$$

being the gyroviscosity coefficient. Note that in obtaining the above expression the annihilator identities [109]:

$$\int_{\vec{V}} V_\parallel I[\beta_a(V)V_\parallel/B, \beta_b(V)V_\parallel/B]F_a d^3V = 0 \tag{3.5-62}$$

and

$$\langle B\int_{\vec{V}} V_\parallel I[\beta_a(V)V_\parallel B, \beta_b(V)V_\parallel B]F_a d^3V\rangle = 0 \tag{3.5-63}$$

have been employed (Here $\beta_a(V)$ is an arbitrary function of the particle kinetic energy). Physically, eq.(3.5-59) represents the neoclassical gyroviscous force contribution to the parallel ion viscosity in the banana regime. As expected, this component is driven by the radial gradient in the toroidal angular frequency of rotation in the long mean free path regime (See the discussion presented in section 2.2 of this thesis). In a similiar manner, the results of section 3.4 can be used to show that

$$\mu^{P_*}_{aj0} = \mu^{B_*}_{aj0} \tag{3.5-64}$$

as expected. It is noteworthy that in the collisional regime the lowest order neoclassical gyroviscous force contribution to the parallel ion viscosity vanishes as one might expect from the discussion given in section 2.2 of this thesis.

A more useful form for the neoclassical component of the parallel momentum stress constitutive relationship is the quantity

$$<(\vec{B}\cdot\vec{\nabla}\cdot\overleftrightarrow{M}_a)/n_a> \quad . \tag{3.5-65}$$

In particular, carrying out the indicated differentiations and using the result in conjunction with eqs.(3.5-40) through (3.5-54) yields

$$<(\vec{B}\cdot\vec{\nabla}\cdot\overleftrightarrow{M}_a)/n_a> \cong <m_a\vec{B}\vec{u}_{aE}:\vec{\nabla}\vec{u}_{aE}> + <\delta T^{(2)}_{a1}/n_a(\hat{n}_{\parallel}\cdot\vec{\nabla}B)> - <T^{(2)}_{\parallel a1}/n_a (\vec{B}\cdot\vec{\nabla}\ln n_a)> + <m_a\gamma_{da1}\vec{B}\cdot\vec{V}_a> \quad . \tag{3.5-66}$$

Combining eqs.(3.5-48) with (3.5-66) yields

$$<(\vec{B}\cdot\vec{\nabla}\cdot\overleftrightarrow{M}_a)/n_a> = \sum_j^1 [<m_a\vec{B}\vec{u}_{aE}:\vec{\nabla}\vec{u}_{aE}> + <(\hat{\mu}^i_{aj0} + \hat{\mu}^{i*}_{aj0})U^X_{a1j}/n_a (\hat{n}_{\parallel}\cdot\vec{\nabla}B)^2> + <m_a\gamma_{da1}\vec{B}\cdot\vec{V}_a>] \tag{3.5-67}$$

where

$$\hat{\mu}^{i}_{aj0} = \mu^{i}_{aj0} + \zeta^{i}_{aj0} \tag{3.5-68}$$

and

$$\mu^{i_*}_{aj0} = \mu^{i_*}_{aj0} + \zeta^{i_*}_{aj0} \tag{3.5-69}$$

with

$$\zeta^{i}_{aj0} = 6(p_a/n_a)(n_a)^{j}\{x_a^2 O_p[x_a^2 P_\ell^{(3-\ell)}(V_\parallel/V)A^{i_*}_{a0}]\bar{L}_j^{3/2}(x_a^2)\}(\hat{n}_\parallel\cdot\vec{\nabla}\ln n_a)/(\hat{n}_\parallel\cdot\vec{\nabla}\ln B) \tag{3.5-70}$$

and

$$\zeta^{i_*}_{aj0} = 6(p_a/n_a)\int_{\vec{V}} x_a^2 P_1^2(x_a^2)\hat{f}^{*(2)}_{a1} d^3V/U^{\chi}_{a1j}\,(\hat{n}_\parallel\cdot\vec{\nabla}\ln n_a)/(\hat{n}_\parallel\cdot\vec{\nabla}\ln B) \tag{3.5-71}$$

and the integral operator $O_p[K(P_\ell(V_\parallel/V))]$ is defined such that

$$O_p[K(P_\ell(V_\parallel/V))] = 5/2\int_0^1 P_1^2(\xi)K(P_\ell(\xi))d\xi \quad . \tag{3.5-72}$$

Note here that the poloidal variations in the particle density are explicitly accounted for with this form of the momentum stress constitutive relationship.

Finally, to develop an appropriate constitutive relationship for the parallel beam ion stress forces, use is made of the fact that owing to their high energy the beam particles are assumed to be predominatly in the banana regime. As a result, the same type procedure as that used

in section 3.3 of this thesis for the banana regime can be used to obtain the desired relationship. In particular, the beam ion kinetic equation (see Appendix H) can be multiplied by $\hat{U}_{\parallel}(\lambda,V)\langle B^2\rangle^{1/2}(\S d\ell/V_{\parallel})/(\bar{f}_c^B B\int_0^{2\pi} d\ell/B)$ and subtracted from from the beam ion kinetic equation and the $m_a\vec{B}\cdot\vec{\nabla}V^{2(k-1)}/2$ moments of the resulting expression selected to give

$$\langle\vec{B}\cdot\vec{\nabla}\cdot\overleftrightarrow{H}_{Bk}\rangle = \langle\delta T_{Bk}^{(2)}(\hat{n}_{\parallel}\cdot\vec{\nabla}B)\rangle \cong \langle\mu_{Bk}V_{\parallel B}(\hat{n}_{\parallel}\cdot\vec{\nabla}B)^2\rangle \tag{3.5-73}$$

where the beam in stress coefficient is defined such that

$$\mu_{Bk} = \bar{f}_T^B n_e m_e \beta\eta_{eB}\alpha_c^3(v_{te}/\bar{v}_{Bk})^3 B/(\hat{n}_{\parallel}\cdot\vec{\nabla}B)^2 \tag{3.5-74}$$

with

$$(v_{te}/\bar{v}_{Bk})^3 = \int_{\vec{V}} V_{\parallel}V^{2(k-1)} f_B d^3V/x_e^3/(\int_{\vec{V}} V_{\parallel} f_B d^3V) \ . \tag{3.5-75}$$

Note that the term $\alpha_c^3(v_{te}/\bar{v}_{Bk})^3$ represents that fraction of beam momentum lost from pitch angle scattering with the background plasma ions [110,111,112]. Furthermore in obtaining the functional structure of eq.(3.5-73), the viscous stress force in response to a nonuniform heat flux has been neglected since the energy diffusion component of the collisional momentum exchange operator is small in comparison the slowing down/ pitch angle scattering effects of the beam particles with the background plasma species.

CHAPTER IV

EXPERIMENTAL CORRELATIONS

4.1 INTRODUCTION

The use of an externally imposed source of momentum to control or reverse the influx of impurities in a toroidally confined plasma has been studied extensively. In particular, it has been predicted theoretically [13-18] and experimentally observed [19-21] that coinjected neutral beam momentum will inhibit or reverse the inward flow of impurities in a tokamak plasma. In this chapter, the relavent experimental data dealing with the effects of unbalanced neutral beam injection, strong rotation and radial viscous transfer on momentum and particle transport in tokamaks plasmas is reviewed and the applicable portions of the transport theory developed in the earlier chapters of this thesis are applied in an attempt to qualitatively explain the observed experimental results.

In section 4.2 of this chapter, a number of relavent plasma rotation and momentum confinement experiments are reviewed and the results are compared to the theory developed in the previous chapters of this thesis. In particular, it is shown that the theoretical expressions for the angular velocity of rotation and gyroviscous drag force can qualitatively predict the observed rotational

characteristics and momentum confinement times inferred from various beam injection experiments. In the last part of this section, the general nature and fundamental properties of the gyroviscous momentum flux are explored.

In the next section of this chapter, the relavent experimental data obtained from impurity flow reversal measurements are reviewed. In particular, the experimental data from PLT and ISX-B tokamaks clearly indicates that beam counter-injection causes a strong build-up of impurities in the plasma center, while co-injection does not cause any acculumation, or can even cause a reduction in the central impurity concentration.

In the final section of this chapter, the radial particle transport flux is evaluated for a strongly rotating beam injected two-species plasma in the large aspect ratio/low beta limit. In this regard, a plasma in which the ion-impurity collisions dominate the transport process is considered so that an ion-impurity Lorentz model is applicable. In this case, the fuel ions enter the long mean free path regime and the high Z impurities remain in the collision dominated regime due to their large self-scattering rate. The results of this theoretical analysis are then compared qualitatively to the flow reversal measurements obtained from experiments on present generation tokamaks.

4.2 PLASMA ROTATION AND MOMENTUM CONFINEMENT

The experimental response of present generation tokamaks to unbalanced momentum injection indicates that central rotational velocities of approximately 10^5m/sec have been obtained [42,43,49,50,113-115]. During the initial phase of the beam injection sequence, the plasma is accelerated on a time scale of ten to thirty milliseconds, a value slightly larger than the rise time of the beam power. The plasma then reaches a state of equilibrium in which the momentum injection is balanced by drag momentum losses, thereby maintaining a constant rotational velocity until the injector is turned off. After the momentum injection is terminated, the rotational velocity decays back to its pre-injection value. The toroidal rotation velocity is generally measured by [42,43,49,50,113-115] three techniques, namely from the measurement of the charge exchange neutral spectra, the measurement of the propagation velocity of sawtooth oscillations, and the Doppler shift of spectral lines. Of these methods, the latter technique is the most popular since it permits the rotational velocity to be determined at various radial locations within the plasma and is generally less ambiguous than other techniques. In this section, the relavent rotation and momentum confinement data obtained from beam injection experiments are examined and the results compared to the theory developed in chapter

II of this thesis.

To investigate the dependence of the rotational velocity on controllable plasma parameters such as the beam input power, experiments were conducted on PLT [42,49] and ISX-B [43,50,114,115] in which the rotational velocity was measured while one parameter was varied and the others were held constant. In both devices, it was assumed that a large fraction of the beam momentum was transferred directly to the impurity ions, but the coupling of these ions to the hydrogenic species of the plasma ions is sufficiently strong to prevent different rotational speeds of different ions. Furthermore, most of the rotation studies were performed on the co-injection discharges since counter-injection discharges often disrupt a short time after the beam current is turned on because of impurity accumulation.

The dependence of the central toroidal velocity on electron density was studied for PLT [42,49] and ISX-B [43,50], the result of which revealed that in both devices the central rotation speed exhibited a weak inverse dependence on the average electron density. Unfortunately, measurements of the central rotational velocity's dependence on total beam power in PLT and ISX-B were not consistent. In particular, co-injection experiments conducted on ISX-B showed that the central rotation velocity saturated with increasing input power, rising only by about 50% as P_B was raised from 0.2 to 1.2 MW. Increasing beam power from 1 MW

to 2 MW did not increase the rotation velocity by more than 20%. However, the experimental results from PLT indicate that the central rotational velocity varies linearly with the beam power input of 1.2 MW . To explain this inconsistency, it has been suggested [50] that saturation effects become noticable only when the power per unit volume reaches a certain level. Since the experimental parameter was actually the total beam input power, it is possible that the two groups have actually explored different regions in parameter space since 1.2 MW in PLT corresponds to about .3 MW in ISX-B.

Brau [113], and Brau, et al.,[51] studied plasma rotation in PDX for ohmic and neutral beam heated plasmas in a variety of discharge conditions in both circular and diverted configurations. The toroidal rotation velocity was found to scale linearly with P_{abs}/n_e where P_{abs} and n_e are the power absorbed in plasma and the line average electron density respectively. On the other hand, it was concluded that v_ϕ was independent of I_p in PDX [51], and therefore the toroidal rotation tends to saturate with P_B. This is in agreement with ISX-B [43,50] where the central plasma rotational velocity was relatively insensitive to variations in the plasma current and saturated with increasing injection beam power.

To compare the experimental results discussed thus far to the theory, the lowest order component of the angular

frequency of rotation can be expressed in terms of the total beam input power. In this regard, the steady state version of the flux surface averaged angular momentum conservation equation can be summed over all species to obtain

$$\sum_j \langle m_j n_j \gamma_{dj1} R^2 \hat{e}_\phi \cdot \vec{u}_{aE} \rangle = \sum_j \langle R^2 \hat{e}_\phi \cdot \vec{S}_{j1} \rangle \ . \tag{4.2-1}$$

To obtain an approximate scaling for the lowest order angular frequency of rotation, eq.(4.2-1) can be solved in the large aspect ratio approximation to give

$$\omega(r) = (\omega_{-1}(r) + \omega_0(r)) \cong (\Lambda \langle n_B \vec{B} \cdot \vec{v}_B \rangle) \tag{4.2-2}$$

where

$$\Lambda = (m_e (e_B/e)^2/\tau_{ee}[1 + \sum_{\substack{k \\ k \neq e}} (v_c/\bar{v}_B)^3 \bar{n}_k e_k^2/(\sum_j n_j e_j^2 m_{kB}/m_j)])/\sum_j (p_j K_j(r)/(2\bar{R}^2 \bar{\Omega}_j)) \tag{4.2-3}$$

and

$$K_j(r) = -(r\partial[p_j(\vec{u}_{jE} \cdot \hat{n}_\phi)]/\partial r)/([p_j(\vec{u}_{jE} \cdot \hat{n}_\phi)]) \tag{4.2-4}$$

is a geometric factor which is dependent on the radial profile of the angular frequency of rotation. Note that in obtaining eq.(4.2-2), the radial profile factor has been

taken as unity since this term is characterized by a gradient scale factor of O(1).

To relate the slowed down beam particle velocity to the total injected beam power, the parallel momentum balance equation for the beam particles can be used in conjunction with the parallel viscosity constitutive relationship for the beam particles to obtain

$$\langle n_B \vec{B}\cdot\vec{v}_B\rangle \cong \langle \kappa_B P_{B0}^{1/2}\rangle \tag{4.2-5}$$

and therefore

$$\omega(r) \cong \langle \beta P_{B0}^{1/2}\rangle \tag{4.2-6}$$

where

$$\beta \cong \Lambda\kappa_B \tag{4.2-7}$$

and

$$\kappa_B \cong \sqrt{(2m_B\dot{n}_B^2 e_B/I_{B0})}\,[((v_c/\bar{v}_B)^3\sum_j(\bar{n}_j e_j^2)(e_B/e)^2 m_e \bar{f}_T^B/(\tau_{ee}\sum_j \bar{n}_j e_j^2 m_B/m_j$$
$$+ 2[1 + \sum_{\substack{k\\k\neq e}}(v_c/\bar{v}_B)^3\bar{n}_k e_k^2/(\sum_j \bar{n}_j e_j^2 m_{kB}/m_j)]m_e(e_B/e)^2/\tau_{ee})]^{-1} \tag{4.2-8}$$

with $\dot{n}_B$ being the number of fast ions injected per unit

volume with parallel velocity $v_{\parallel B0}$. Since the angular frequency of rotation is a function of the square root of P_{B0}, it will tend to saturate at higher beam powers if all other parameters are held constant. This is indeed in agreement with the results obtained from experiments conducted on ISX-B and PDX. Likewise for smaller values of the injection beam power, the angular speed of rotation will scale approximately in a linear fashion, a result which is in agreement with the data obtained from rotation experiments on PLT where the total beam input power was considerably less than ISX-B. Furthermore since $\kappa_a \sim \tau_{ee} \sim (1/n_e)$, then the angular frequency of rotation scales inversely with the electron density, and therefore is in agreement with the data obtained from plasma rotation measurements on PLT and ISX-B.

The experimental response of both PLT and ISX-B to toroidal rotation suggests that the toroidal momentum introduced by parallel beam injection is being transferred radially at a rate of one to two orders of magnitude larger that the theoretical predictions from neoclassical perpendicular viscosity calculations. In essence, experimental measurements in PLT have revealed that the velocity profile is parabolic rather than centrally peaked, which is the deposition profile of the injected momentum, thereby implying that the injected momentum was being lost from the plasma center by radial momentum transfer. Further-

more, using the experimental data from PLT in a diffusion model yields an effective momentum coefficient of approximately (1-5) x 10^2 m^2/sec implying that the momentum diffusion rate is roughly the same order of magnitude as the particle and heat diffusion rate [49].

As a general rule, the momentum confinement time can be experimentally determined by two methods, namely from a force balance at steady state rotation or from the decay time after the momentum injection is terminated. With respect to the former method, the conservation of angular momentum equation can be summed over all species to obtain

$$\tau_{dl} = NM(R^2\hat{e}_\phi \cdot \vec{v})/(R^2\hat{e}_\phi \cdot \vec{S}) = NMv_\phi/(\hat{n}_\phi \cdot \vec{S})$$

where $NM = \sum_j n_j m_j$ for the bulk plasma ions, $\vec{S} = \sum_j \vec{S}_{jl}$, τ_{dl} is the effective confinement time for the bulk plasma and v_ϕ is the common steady-state asymptotic flow velocity observed experimentally. The momentum confinement time can be inferred from the second method by requiring that the interspecies and beam particle collisional friction to vanish in the absence of NBI. As a result, the time dependent flux surface averaged angular momentum equation can be solved to obtain

$$v_{\phi j}(t) = v_{\phi j}(0)e^{-t/\tau_{dlj}} \qquad (4.2\text{-}9)$$

and therefore

$$\tau_{dlj} = t/\ln[v_{\phi j}(0)/v_{\phi j}(t)] \ . \tag{4.2-10}$$

Unfortunely however these two methods almost always give different results because of the different treatment of the measured data and also because viscous damping can depend on the rotation velocity itself [50]. The experimental evidence in both PLT [42,49] and ISX-B [43,50] have indicated that momentum confinement increases with n_e during co-injection. This is an expected result since v_ϕ varies inversely with the average electron density. In PDX [51] however, the linear dependence of the toroidal velocity on P_{abs}/n_e implies that the momentum confinement time is independent of n_e . One possible explanation for the discrepency between PLT (and ISX-B) and PDX could be the manner in which the rotational data was taken. In particular, the results obtained from rotational measurements in PDX were deduced by examining discharges taken under a wide variety of conditions rather than by taking single-parameter scans when only one parameter at a time was changed. Furthermore, rotational experiments in ISX-B have indicated that the momentum confinement decreases with the total beam power. In PLT, the momentum confinement time is relatively independent of the beam power input for both co-injection and counter-injection, a consequence of the linear

dependence of v_ϕ with beam input power. In addition, there is evidence that the momentum confinement time is independent of the plasma current in PDX and ISX-B, and consequently distinctly different from the global energy confinement which exhibits a dependence on this parameter in both of these devices. Finally, the momentum confinement was found to be generally a function of the total input power rather than of the directed input power, for all three machines. In general, confinement times of 10-30 ms have been inferred in PLT [42,49]. In ISX-B [43,50], rotational measurements of composite ions have yielded momentum confinement times of 10-20 ms. In PDX [51], rotation decay measurements of titanuim impurity ions have led to inferred momentum confinement times of approximately 80-100 ms for a beam power range of 3.5 to 7.2 MW.

To explain these experimentally observed confinement times, a number of theoretical investigations have been made [34,52,58,59,60-63]. Early theoretical calculations [34,52, 58] of the perpendicular ion viscosity were based on the assumption that the parallel ion flow was much less than its thermal velocity. Unfortunately this neoclassical calculation yielded a radial momentum transport rate two orders of magnitude smaller than is actually observed. Refinement of the neoclassical perpendicular viscosity calculation (proportional to the self-collision frequency) to the high flow velocity regime [59,60,63] still resulted in radial

momentum transport rates of one to two orders of magnitude smaller than those inferred from experiment.

To calculate the momentum confinement time from the expression for the drag frequency developed in section 2.5 of this thesis, the large aspect ratio approximation can be employed to express this frequency in a form which provides more physical insight, namely

$$\tau_{dj1} = (1/\gamma_{dj1}) \cong (2m_j\bar{R}^2\bar{\Omega}_j/(\bar{T}_jK_j(r)) \tag{4.2-11}$$

where

$$K_j(r) = (r\partial[\bar{p}_j(\hat{n}_\phi\cdot\vec{u}_{jE})]/\partial r)/([\bar{p}_j(\hat{n}_\phi\cdot\vec{u}_{jE})]) \tag{4.2-12}$$

is a geometric factor which is dependent on the radial profile of the angular frequency of rotation. Now since $r^2K_j(r) \sim O(1)$ then to the lowest order approximation

$$\tau_{dj} \cong (2m_j\bar{\Omega}_j\bar{R}^2/\bar{T}_j) \tag{4.2-13}$$

which is in exact agreement with the results obtained by Stacey and Sigmar [61] using the Braginski stress tensor. Consequently in view of references [61] and [66], it is concluded that the gyroviscous drag mechanism can account for the momentum confinement times inferred from experiment. It is noteworthy that since γ_{dj} is independent of the

collision frequency, then eq.(4.2-13) will be applicable to all collisionality regimes.

In the last part of this section, the physical nature of the gyroviscous drag force is explored. The microscopic orgin of the gyroviscous element of the total viscosity stress tensor has been investigated by Kaufman [113] and Stacey and Sigmar [61]. In essence, it was shown that the gyroviscous stress arises from $\overline{r_\chi u_{aE\phi}}$ correlations resulting from the poloidal velocity gradient, where the symbol $\overline{xxx}$ denotes an ensemble average at any point in phase space, r_χ is the poloidal position coordinate and $u_{aE\phi} = \hat{n}_\phi \cdot \vec{u}_{aE}$ is the angular speed of rotation. Physically, through any unit volume defined by surfaces directed normal to the unit vector $\hat{n}_\chi$, the toroidal component of momentum due to particle passage through this element will be unbalanced in that as the particles migrate across the surfaces, more momentum is taken out than is brought in. This departure from rigid rotation within a flux surface results in a net transfer of angular momentum across the flux surfaces. Note that this collisionless viscosity is not due to orbital distortions or guiding center drifts, but rather is due to velocity gradients. In essence, the inherent toroidicity of a tokamak geometrically misaligns surfaces of constant angular frequency of rotation with the magnetic flux surfaces, thereby driving a cross field transfer of angular momentum. Note that in the classical

limit the gyroviscous force vanishes. In this sense the gyroviscous component of the momentum stress tensor is a function of the toroidal nature or torodicity of a tokamak.

Finally since the gyroviscous drag force is perpendicular to the magnetic field and the poloidal gradient of the angular velocity, no work is done therefore this force does not result in the dissipation of energy. To demonstrate this fact, the equation governing the adiabatic entropy variable $S = \sum_a p_a^{3/5}\upsilon' = p^{3/5}\upsilon'$ [7] is examined

$$5p/2\partial \ln S/\partial t + 1/\upsilon'\partial[\upsilon'\sum_a\langle\vec{q}_a\cdot\hat{e}_\psi\rangle + \langle 5p_a(\vec{v}_a - \vec{U}_g)\cdot\hat{e}_\psi/2\ ]/\partial\psi =$$

$$\sum_a[\langle\vec{v}_a\cdot\vec{\nabla}p_a\rangle - \langle\overleftrightarrow{\Pi}_a:\vec{\nabla}\vec{v}_a\rangle + \langle(\vec{v}_a - \vec{U}_g)\cdot\hat{e}_\psi\partial p_a/\partial\psi\rangle + \langle F_{a2}\rangle + \langle S_{a2}\rangle]$$

(4.2-14)

More specifically, suppose the term associated with the viscous energy dissipation (viscous heating) is evaluated

$$\langle\vec{v}_a\cdot\vec{\nabla}p_a\rangle - \langle\overleftrightarrow{\Pi}_a:\vec{\nabla}\vec{v}_a\rangle = U_{a1}^{\chi}(\psi)T_a(\psi)\langle\vec{B}\cdot\vec{\nabla}\ln n_a(\psi,\chi)\rangle - \langle\overleftrightarrow{\Pi}_a:\vec{\nabla}\vec{v}_a\rangle =$$

$$- \langle\overleftrightarrow{\Pi}_a:\vec{\nabla}\vec{v}_a\rangle$$

(4.2-15)

Noting that

$$\overleftrightarrow{\Pi}_a = m_a\int_{\vec{V}}\vec{V}\vec{V}(\hat{f}_{a1} + \tilde{f}_a)d^3V = \overleftrightarrow{\hat{\Pi}}_{a1} + 2[\hat{n}_{\parallel}\hat{n}_{\parallel} \times \tilde{\vec{\Pi}}_a]_2$$

(4.2-16)

and

$$\vec{v}_a = \vec{u}_{aE} + \vec{V}_{a1} \tag{4.2-17}$$

where

$$\overleftrightarrow{\hat{\Pi}}_{a1} = m_a \int_{\vec{V}} \vec{V}\vec{V}\hat{f}_{a1} d^3V \tag{4.2-18}$$

is the component of the viscosity tensor which is associated with the gyrotropic component of the particle distribution function and

$$\tilde{\vec{\Pi}}_a = 2m_a(\hat{n}_{\parallel}\cdot\vec{\nabla}\vec{u}_{aE})/(\Omega_a v_{ta}^2)\int_{\vec{V}} V_{\parallel}^2 V_{\perp}^2 F_a d^3V \tag{4.2-19}$$

is the component of the viscosity tensor associated with the gyroviscous drag force, then to the lowest order approximation

$$-\langle\overleftrightarrow{\Pi}_a:\vec{\nabla}\vec{v}_a\rangle = \langle\vec{v}_a\cdot\vec{\nabla}\cdot\overleftrightarrow{\Pi}_{a1}\rangle - 2\langle[\hat{n}_{\parallel}\hat{n}_{\parallel}\times\tilde{\vec{\Pi}}_a]_2:\vec{\nabla}\vec{u}_{aE}\rangle = \langle\vec{B}/n_a\cdot\vec{\nabla}\cdot\overleftrightarrow{\hat{\Pi}}_{a1}\rangle U_{a10}^{\chi} \tag{4.2-20}$$

or

$$\langle\overleftrightarrow{\Pi}_a:\vec{\nabla}\vec{v}_a\rangle \sim \langle\mu_{a10}(\hat{n}_{\parallel}\cdot\vec{\nabla}B)^2/n_a\rangle U_{a10}^{\chi^2}(\psi) \ . \tag{4.2-21}$$

In essence, eq.(4.2-21) indicates that the viscous heating in a tokamak is a function only of the decay of the

poloidal plasma rotation due to frictional drag. Therefore the gyroviscous drag does not change the adiabatic entropy or dissipate energy.

4.3 IMPURITY ION FLOW REVERSAL

Another consequence of neutral beam injection is the phenomena of impurity ion flow reversal. In a closed system without sources or sinks of particles and momentum, the classical [2,7] and neoclassical [3,4,2-8] theories predict inward impurity ion flow. However when external momentum is injected into a tokamak plasma the conventional transport process is altered. In particular, the direct collisional interaction of the beam source with the background plasma drives a cross field flux in a manner analogous to that of collisional momentum and heat exchange among different species. The direct effect of beam co-injection (counter-injection) due to momentum exchange is to drive the impurity ions inward (outward) [13,17,18]. In addition, the external beam source and associated drag force alter the lowest order particle flows within the flux surface thereby modifying the particle and heat transport across the magnetic surfaces [17,18]. More specifically, the external momentum and drag sources contribute to the radial electrostatic potential gradient which leads to a transport flux [17,18]. Co-injection produces a negative radial gradient in the ambipolar potential which tends to drive impurity ions radially outward [17,18,47,67]. The effect of counter-injection is opposite to that of co-injection. Finally, the centrifugal inertia effects arising from the beam

induced plasma rotation leads to density and electrostatic potential variations along the magnetic field lines [8,44, 45]. This in turn modifies the lowest order flow patterns and therefore the cross field particle and heat transport fluxes [8,45,46,47]. The primary effect of the inertial forces is to produce an inward impurity ion flux for intense beam co-injection and conversely for counter-injection [44, 47,67].

In general, the diffusive fluxes (i.e., the modified Pfirsch-Schluter and neoclassical fluxes) are inward for the normally negative main ion density gradient. Since the net impurity ion flux is essentially determined by the pressure gradient, inertial force and electric field components, then the outward component of the impurity ion fluxes produced by the inertial force and radial electric field competes with the inward components produced by the pressure gradient and direct beam momentum input components inertial force during beam co-injection. With increasing co-injection, the rotational and radial electric field component eventually becomes large enough to offset the pressure gradient driven and beam momentum input components thereby resulting in flow reversal. With the counter-injection, all of the components with the exception of the direct beam momentum input component are inward and additive resulting in impurity ion accumulation at the plasma center.

A number of experiments were undertaken to check the predicted impurity ion flow reversal with beam injection. The experimental technique most commonly used in impurity transport measurements involves the spectroscopic detection of emitted radiation in the far ultraviolet and soft x-ray region of the spectrum. Furthermore, spectral analysis of impurity forbidden transitions (charge exchange recombination spectroscopy (CXRS) of charge exchange excited CXE spectral lines of fully stripped low z ions) has been employed to identify various impurity species concentrations. Likewise impurity contents can also be deduced from plasma conductivity measurements and enhanced radiation measurements.

Impurity ion confinement experiments have been conducted on ISX-B for both beam co-injection and counter-injection using intrinsic as well as test impurities such as argon and titanium [21,43,116]. The emission spectrum from intrinsic titanium and iron ions strongly indicate that counter-injection always enhances accumulation, but co-injection inhibits its accumulation so that there is seldom any buildup of impurities after adjustment of the plasma to a new equilibrium, about 20-30 ms following the onset of injection. After an initial rise following the start of co-injection sequence, the radiated power remains almost constant. Usually 10-20% of the input power is radiated during co-injection and spatial profiles

show that most of it comes from the periphery. The soft x-ray signals increase initially during co-injection because of plasma heating and impurity influx, and then maintains a relatively constant average value throughout the shot. However during counter-injection, the signals rise rapidly until about 5 ms (40 ms for iron) before a disruption occurs, then they begin to decrease.

When laser-ablated titanium is introduced into counter-injected discharges, its presence becomes completely obscured by the accumulation of intrinsic titanium in the central interior of the plasma as evidenced by the rapid increases appearing first in the highest ionization stages. However, seeding co-injection discharges with laser-ablated titanium shows that the characteristic confinement time for the highest ionization stages is only 10-20 ms, a value much less than the 100 ms that were deduced from ohmically heated discharges.

Studies of impurity behavior under differing injection conditions have been extended in reference [43,117] to include fully stripped ionization stages by exploiting the charge-exchange excited oxygen lines. The results are consistent with previous investigations of metallic elements which revealed strong dependences on the sense (co vs counter) of injection. In particular it was shown that the central oxygen content grows rapidly during counter-injection leading to a disruption while co-injection

maintains a quasi-steady level of oxygen.

The introduction of argon as a test impurity in ISX-B [20,43,115] confirmed the ion flow reversal characteristics of beam co-injection. In essence it was shown that during co-injection no accumulation was observed with the argon flux from the exterior of the plasma being reversed during this mode of injection. However during counter-injection the accumulation of argon is so rapid that the plasma disrupts within 30 ms with an emissivity of about 1.4 W/cm^3 [21], thus causing an extreme cooling in the center [115].

The impurity transport properties of PLT for both co-injection and counter-injection have been studied extensively [19,118,119] for a number of impurities. Eames [25] measured the chordal distribution of ultra-soft x-rays orginating from a tungsten limiter for a co-injection experiment with 585KW of beam power and a counter-injection experiment with 430 KW of beam power. The parallel injection case resulted in a 30% increase in the central power loss while for counter-injection the central power loss was increased by a factor of 20. In the co-injection case the tungsten profiles remained quite flat out to about 20 cm radius and at all times remained in the range of 10^{10} to 1.4×10^{10} cm^{-3}. During the counter-injection experiments it was concluded that the tungsten profile peaked reaching a maximum value of 6.8×10^{10} cm^{-3} which is a factor of six

increase as compared to the pre-injection case. As a result, it was concluded that the beam co-injection caused the tungsten flux to change from an inward to an outward direction, whereas for counter-injection the tungsten flux is always directed inward, the magnitude of which is substantially greater than the flux during co-injection or ohmic discharges, and increases with time.

Suckewer et.al.[49] studied the chordal distribution of ultra-soft x-rays to arrive at the experimental values of the iron density distribution and the particle fluxes at different times during co-injected and counter-injected discharges. The experiments indicated that the chord intensity (i.e. the number of photons emitted per cm^2 per second) for Fe XXIII and Fe XV showed that a substantial difference in the iron concentrations between the co-injection and counter-injection cases. In particular, the soft x-ray signals from these discharges revealed that a small increase in intensity resulted for the beam co-injection case and effectively doubled with counter-injection. Additional studies on PLT [119] showed that the effect of injected laser-ablated scandium and molybdenom elements yielded central ion densities that were two to three times larger in the counter-injection case than the co-injection case.

In summary, there is a fairly large, well documented experimental data base which supports the conclusion that

the plasma center, whereas beam co-injection does not cause any impurity accumulation and in some cases results in ion flow reversal.

4.4 FORMAL STRUCTURE OF THE LOWEST ORDER RADIAL PARTICLE FLUX FOR A MIXED REGIME BEAM INJECTED PLASMA

As an application of the theory developed in the preceeding chapters, the cross field particle transport flux will be calculated for a strongly rotating beam injected plasma. To compare the results of this computation to that obtained by other authors [44,47,67], a plasma is considered in which ion-impurity collisions dominate the transport process ($\alpha = z_z^2 n_z/(z_i^2 n_i) > (m_e/m_i)^{1/2}$) and thermal effects are neglected (isothermal Lorentz model). In this case a two species (excluding beam ions) model is applicable where the dominant hydrogenic ion enters the banana regime and the high Z impurity ion remains in the collisional regime.

To obtain a formal expression for the radial ion transport flux, the mixed regime friction-flow constitutive relationships can be used in conjunction with eq.(2.5-1) for j = 0 to give

$$I_{i1}^{\psi} = \Gamma_i^{\psi} \cong 2\pi/(e_i\gamma') [(\bar{\nu}_{iz}(1 + \bar{\beta}_i)\langle In_i U_{\perp i10}^{\chi}/B\rangle - \bar{\nu}_{zi}\langle In_z U_{\perp z10}^{\chi}/B\rangle) + (\bar{\eta}_{iz}(1 + \bar{\alpha}_i)\langle IU_{i10}^{\chi}(\psi)\rangle - \bar{\eta}_{zi}\langle IU_{z10}^{\chi}(\psi)\rangle) + (\bar{\upsilon}_{iB}\langle In_i V_{\parallel B}/B\rangle - \bar{\gamma}_{zB}\langle In_z V_{\parallel B}/B\rangle)] \tag{4.4-1}$$

where in view of the assumed neglect of thermal effects (and

therefore the heat flow vector)

$$\bar{\nu}_{iz} = m_i[\{\bar{\eta}^s_{iz}\} + (\{\bar{f}^B_T\bar{\eta}^{\perp}_i\bar{\eta}^s_{iz}/\bar{\eta}^B_i\} - \{\bar{\eta}^s_{iz}\}\{\bar{f}^B_T\bar{\eta}^{\perp}_i/\bar{\eta}^B_i\}) + (\{\bar{f}^B_c \bar{\eta}^s_{iz}\bar{\eta}^s_{ii}/\bar{\eta}^B_i\} - \{\bar{\eta}^s_{iz}\}\{\bar{f}^B_c\bar{\eta}^s_{ii}/\bar{\eta}^B_i\}) - (m_z n_z/(m_i n_i))\{m_i n_i \bar{\eta}^s_{iz}\} /\{m_z n_z \bar{\eta}^s_{zi}\}(\{[\bar{\eta}^s_{zi}]^2/\bar{\eta}^s_z\} - \{\bar{\eta}^s_{zi}/\bar{\eta}^s_z\}^2/\{1/\bar{\eta}^s_z\})] \tag{4.4-2}$$

$$\bar{\nu}_{zi} = m_z[\{\bar{\eta}^s_{zi}/\bar{\eta}^s_z\}/\{1/\bar{\eta}^s_z\} + (\{\bar{\eta}^s_{zi}\bar{\eta}^s_{zz}/\bar{\eta}^s_z\} - \{\bar{\eta}^s_{zi}/\bar{\eta}^s_z\}\{\bar{\eta}^s_{zz} /\bar{\eta}^s_z\}/\{1/\bar{\eta}^s_z\}) - (m_i n_i/(m_z n_z))(\{\bar{f}^B_c[\bar{\eta}^s_{iz}]^2\{m_z n_z \bar{\eta}^s_{zi}\}/(\{m_i n_i \bar{\eta}^s_{iz}\} \bar{\eta}^B_i)\} - \{\bar{\eta}^s_{iz}\}\{\bar{f}^B_c\bar{\eta}^s_{iz}\{m_z n_z \bar{\eta}^s_{zi}\}/(\{m_i n_i \bar{\eta}^s_{iz}\}\bar{\eta}^B_i)\})] \tag{4.4-3}$$

$$\bar{\eta}_{iz} = \bar{\nu}_{iz} - m_i(\{\bar{f}^B_T\bar{\eta}^{\perp}_i\bar{\eta}^s_{iz}/\bar{\eta}^B_i\} - \{\bar{\eta}^s_{iz}\}\{\bar{f}^B_T\bar{\eta}^{\perp}_i/\bar{\eta}^B_i\}) \tag{4.4-4}$$

$$\bar{\eta}_{zi} = \bar{\nu}_{zi} \tag{4.4-5}$$

$$\bar{\upsilon}_{iB} = (\bar{\gamma}_{iB} - \bar{\lambda}_{Bi}) = m_i(\{\bar{f}^B_c\bar{\eta}^s_{iz}\bar{\gamma}^s_{iB}/\bar{\eta}^B_i\} - \{\bar{\eta}^s_{iz}\}\{\bar{f}^B_c\bar{\eta}^s_{iB}/\bar{\eta}^B_i\}) - \bar{\lambda}_{Bi} \tag{4.4-6}$$

$$\bar{\gamma}_{zB} = m_z(\{\bar{\eta}^s_z\bar{\gamma}^s_{zB}/\bar{\eta}^s_z\} - \{\bar{\eta}^s_{zi}/\bar{\eta}^s_z\}\{\bar{\gamma}^s_{zB}/\bar{\eta}^s_z\}/\{1/\bar{\eta}^s_z\}) \tag{4.4-7}$$

with

$$\bar{\beta}_i = m_i\gamma_{dil}/\bar{\nu}_{iz} \tag{4.4-8}$$

and

$$\bar{\alpha}_i = m_i \gamma_{di1} / \bar{\eta}_{iz} \quad . \tag{4.4-9}$$

being the ratio of the drag frequency to the collision frequency. Note here that in formulating eq.(4.4-1), the smaller order classical component of the cross field flux has been neglected and for the parallel momentum injected case considered here $\langle R^2 \hat{e}_\phi \cdot \vec{\xi}_a \rangle \cong \langle I \hat{n}_\parallel \cdot \vec{\xi}_a / B \rangle$.

In order to express the radial transport flux in terms of the thermodynamic forces, the surface functions U^{χ}_{i10} and U^{χ}_{z10} must be eliminated from eq.(4.4-1). In this regard, the parallel momentum stress force constitutive relationship can be used in conjunction with the parallel component of the momentum balance equation to express the surface functions in terms of the diamagnetic and beam flows. However before carrying out this process, it is of interest to note that the lowest order non-vanishing kinetic stress term can be expressed in the simplified form:

$$\begin{aligned} &\langle (\mu^{I}_{a0} \vec{B}\vec{u}_{aE} : \vec{\nabla}\vec{u}_{aE}) / n_a \rangle = \langle m_a \vec{B} \cdot (\vec{V}^{(1)}_a \cdot \vec{\nabla}\vec{u}^{(0)}_E + \vec{u}^{(0)}_E \cdot \vec{\nabla}\vec{V}^{(1)}_a) \rangle = \\ &-\gamma' m_a / 2\pi \langle (\omega_{a0}(\chi,\psi) \vec{\nabla} \times \vec{u}^{(0)}_E + \omega_{-1}(\psi) \vec{\nabla} \times \vec{V}^{(1)}_a) \cdot \hat{e}_\psi \rangle = -\gamma' m_a / 2\pi \\ &\langle \omega_{a0}(\chi,\psi) \vec{B} \cdot \vec{\nabla} (R \vec{u}^{(0)}_E \cdot \hat{n}_\phi) \rangle \end{aligned} \tag{4.4-10}$$

where

$$\omega_{a0}(\chi,\psi) = -2\pi/(\gamma' e_a n_a)(\partial p_a/\partial\psi + e_a n_a[\partial\Phi_0(\chi,\psi)/\partial\psi + m_a/e_a$$
$$(\partial(u_E^{(0)2}/2)/\partial\psi - R^{-1}\vec{u}_E^{(0)}\cdot\hat{n}_\phi\partial(R\vec{u}_E^{(0)}\cdot\hat{n}_\phi)/\partial\psi)]) + \kappa_a(\psi)B/(n_a R) \quad . \tag{4.4-11}$$

As a result, eq.(3.5-67) becomes

$$<(\vec{B}\cdot\vec{\nabla}\cdot\overleftrightarrow{M}_z)/n_z> = <(\hat{\mu}^c_{z00} + \hat{\mu}^{c*}_{z00})(\hat{n}_\parallel\cdot\vec{\nabla}B)^2/n_z>U^\chi_{z10}(\psi) - \gamma' m_z/2\pi$$
$$<\omega_{z0}(\chi,\psi)\vec{B}\cdot\vec{\nabla}(R\vec{u}_E^{(0)}\cdot\hat{n}_\phi)> \tag{4.4-12}$$

and

$$<(\vec{B}\cdot\vec{\nabla}\cdot\overleftrightarrow{M}_i)/n_i> = <\hat{\mu}^B_{i00}(\hat{n}_\parallel\cdot\vec{\nabla}B)^2/n_i>U^\chi_{i10}(\psi) + <\hat{\kappa}^{B*}_{i00}(BR^2)$$
$$(\hat{n}_\parallel\cdot\vec{\nabla}B)/n_i>(2\pi/\gamma'\partial[R^{-1}\vec{u}_E^{(0)}\cdot\hat{n}_\phi]/\partial\psi) - \gamma' m_i/2\pi<\omega_{i0}(\chi,\psi)$$
$$\vec{B}\cdot\vec{\nabla}(R\vec{u}_E^{(0)}\cdot\hat{n}_\phi)> \tag{4.4-13}$$

for the main and impurity ions respectively, with

$$\hat{\kappa}^{B*}_{i00} = \kappa^{B*}_{i00} + \zeta^{B*}_{i00} \tag{4.4-14}$$

and

$$\zeta^{B*}_{i00} = \eta_{dil}(\hat{n}_\parallel\cdot\vec{\nabla}\ln n_i)/(\hat{n}_\parallel\cdot\vec{\nabla}\ln B)\{x_i^2 O_p[x_i^2 P_1^2(V_\parallel/V)]\} \quad . \tag{4.4-15}$$

Combining eqs.(4.4-12) and (4.4-13) with the flux surfaced

averaged parallel component of the momentum balance equation (divided by the particle density) yields

$$U^{\chi}_{z10}(\psi) = [\gamma'/(2\pi)<(m_z A_i \omega_{z0}(\chi,\psi)/D - m_i \bar{\eta}_{iz}\omega_{i0}(\chi,\psi)<B^2/n_z>/D)$$
$$\vec{B}\cdot\vec{\nabla}(R\vec{u}_E^{(0)}\cdot\hat{n}_\phi)> - <(A_i\bar{\nu}_{zi}(1+\bar{\beta}_z)/D - \bar{\nu}_{zi}\bar{\eta}_{iz}<B^2/n_z>\bar{n}_z/(\bar{n}_i D))$$
$$(BU^{\chi}_{\perp z10})> + <(A_i\bar{\nu}_{iz}\bar{n}_i/(\bar{n}_z D) - \bar{\nu}_{iz}\bar{\eta}_{iz}(1+\bar{\beta}_i)<B^2/n_z>/D)(B$$
$$U^{\chi}_{\perp i10})> - <(A_i\bar{\upsilon}_{zB}/D + \bar{\eta}_{iz}\bar{\upsilon}_{iB}<B^2/n_z>/D)(BV_{\parallel B})>]$$

(4.4-16)

and

$$U^{\chi}_{i10}(\psi) = [\gamma'/(2\pi)<(m_i A_z \omega_{i0}(\chi,\psi)/D - m_z \bar{\eta}_{zi}\omega_{z0}(\chi,\psi)<B^2/n_i>/D)$$
$$\vec{B}\cdot\vec{\nabla}(R\vec{u}_E^{(0)}\cdot\hat{n}_\phi)> - <(A_z\bar{\nu}_{iz}(1+\bar{\beta}_i)/D - \bar{\nu}_{iz}\bar{\eta}_{zi}<B^2/n_i>\bar{n}_i/(\bar{n}_z D))$$
$$(BU^{\chi}_{\perp i10})> + <(A_z\bar{\nu}_{zi}\bar{n}_z/(\bar{n}_i D) - \bar{\nu}_{zi}\bar{\eta}_{zi}(1+\bar{\beta}_z)<B^2/n_i>/D)(B$$
$$U^{\chi}_{\perp z10})> - <(A_z\bar{\upsilon}_{iB}/D + \bar{\eta}_{zi}\bar{\upsilon}_{zB}<B^2/n_i>/D)(BV_{\parallel B})> - <A_z\kappa^{B_*}_{i00}(BR^2)/D$$
$$(\hat{n}_\parallel\cdot\vec{\nabla}B)/n_i>(2\pi/\gamma'\partial(R^{-1}\vec{u}_E^{(0)}\cdot\hat{n}_\phi)/\partial\psi)]$$

(4.4-17)

where

$$A_i = [<\hat{\mu}^B_{i00}(\hat{n}_\parallel\cdot\vec{\nabla}B)^2/n_i> + \bar{\eta}_{iz}(1+\bar{\alpha}_i)<B^2/n_i>]$$

(4.4-18)

$$A_z = [<(\hat{\mu}^C_{z00} + \hat{\mu}^{C_*}_{z00})(\hat{n}_\parallel\cdot\vec{\nabla}B)^2/n_z> + \bar{\eta}_{zi}(1+\bar{\alpha}_z)<B^2/n_z>]$$

(4.4-19)

and

$$D = [A_i A_z - \bar{\eta}_{iz}\bar{\eta}_{zi}\langle B^2/n_i\rangle\langle B^2/n_z\rangle] \quad . \tag{4.4-20}$$

Finally upon combining eqs.(4.4-16) and (4.4-17) with eq.(4.4-1), using the result in conjunction with eq.(2.5-23) for j = 0 and rearranging yields

$$\Gamma_i^\psi = \Gamma_{ip'}^\psi + \Gamma_{i\Phi'}^\psi + \Gamma_{iu_E'}^\psi + \Gamma_{iI}^\psi + \Gamma_{id}^\psi + \Gamma_{iV_B}^\psi \tag{4.4-21}$$

where

$$\Gamma_{ip'}^\psi = -(2\pi/\gamma')^2[\langle(I/B)^2(\xi_i^{p'}/e_i^2\partial p_i/\partial\psi - \xi_z^{p'}/(e_i e_z)\partial p_z/\partial\psi)\rangle] \tag{4.4-22}$$

is the pressure gradient driven component of the ion particle flux with

$$\xi_i^{p'} \cong \bar{\nu}_{iz}(1 + \bar{\beta}_i)[1 - (\hat{\alpha}_{iz} + \hat{\beta}_{iz})B^2/(n_i\langle B^2/n_i\rangle)] \tag{4.4-23}$$

$$\xi_z^{p'} \cong \bar{\nu}_{zi}[1 - (\hat{\alpha}_{zi} + \hat{\beta}_{zi})B^2/(n_z\langle B^2/n_z\rangle)] \tag{4.4-24}$$

$$\hat{\alpha}_{iz} = [(1 + Y)(1 + \bar{\beta}_i)(1 + \bar{\alpha}_z) - 1]/[(1 + X)(1 + Y)(1 + \bar{\alpha}_i)(1 + \bar{\alpha}_z) - 1] \tag{4.4-25}$$

$$\hat{\beta}_{iz} = [(1 + X)(1 + \bar{\alpha}_i)/(1 + \bar{\beta}_i) - 1]/[(1 + X)(1 + Y)(1 + \bar{\alpha}_i)(1 + \bar{\alpha}_z) - 1] \tag{4.4-26}$$

$$\hat{\alpha}_{zi} = [(1 + Y)(1 + \bar{\beta}_i)(1 + \bar{\alpha}_z) - (1 + \bar{\beta}_i)(1 + \bar{\beta}_z)]/[(1 + X)(1 + Y)(1 + \bar{\alpha}_i)(1 + \bar{\alpha}_z) - 1] \tag{4.4-27}$$

$$\hat{\beta}_{zi} = [(1 + Y)(1 + \bar{\beta}_i)(1 + \bar{\alpha}_z) - 1]/[(1 + X)(1 + Y)(1 + \bar{\alpha}_i)(1 + \bar{\alpha}_z) - 1] \tag{4.4-28}$$

$$X = \langle \hat{\mu}^B_{i00} (\hat{n}_{\parallel} \cdot \vec{\nabla} B)^2 / (n_i \bar{\eta}_{iz} (1 + \bar{\alpha}_i) \langle B^2/n_i \rangle) \rangle \tag{4.4-29}$$

$$Y = \langle (\hat{\mu}^c_{z00} + \hat{\mu}^{c*}_{z00}) (\hat{n}_{\parallel} \cdot \vec{\nabla} B)^2 / (n_z \bar{\eta}_{zi} (1 + \bar{\alpha}_z) \langle B^2/n_z \rangle) \rangle \ . \tag{4.4-30}$$

Likewise,

$$\Gamma^{\psi}_{i\Phi'} = -(2\pi/\gamma')^2 [\langle (I/B)^2 (\xi_i^{\Phi'} - \xi_z^{\Phi'}) / e_i \partial \Phi_0(\chi,\psi)/\partial\psi \rangle] \tag{4.4-31}$$

is the radial electric field (radial gradient of the electrostatic potential) driven component of the ion particle diffusion flux with

$$\xi_i^{\Phi'} = n_i \xi_i^{p'} \tag{4.4-32}$$

and

$$\xi_z^{\Phi'} = n_z \xi_z^{p'} \tag{4.4-33}$$

and

$$\Gamma^{\psi}_{iu_E'} = -(2\pi/\gamma')^2[<(I/B)^2(\xi_i^{u_E'}/e_i^2 - \xi_z^{u_E'}/(e_i e_z))(\partial(u_E^{(0)2}/2)/\partial\psi$$

$$- (R^{-1}\vec{u}_E^{(0)}\cdot\hat{n}_\phi)\partial(R\vec{u}_E^{(0)}\cdot\hat{n}_\phi)/\partial\psi)>] \tag{4.4-34}$$

is a component of the ion particle diffusion flux which is driven by the centrifugal force with

$$\xi_i^{u_E'} = m_i\xi_i^{\Phi'} = m_i n_i \xi_i^{p'} \tag{4.4-35}$$

and

$$\xi_z^{u_E'} = m_z\xi_z^{\Phi'} = m_z n_z \xi_z^{p'} \ . \tag{4.4-36}$$

In addition,

$$\Gamma^{\psi}_{iI} = [<(I/B)(\xi_i^I\omega_{i0}(\chi,\psi) - \xi_z^I\omega_{z0}(\chi,\psi))/e_i\hat{n}_{\parallel}\cdot\vec{\nabla}(R\vec{u}_E^{(0)}\cdot\hat{n}_\phi)>] \tag{4.4-37}$$

is the inertial driven component of the particle flux with

$$\xi_i^I = m_i n_i \hat{\zeta}_{iz}^I B^2/(n_i<B^2/n_i>) \tag{4.4-38}$$

$$\xi_z^I = m_z n_z \hat{\zeta}_{zi}^I B^2/(n_z<B^2/n_z>) \tag{4.4-39}$$

$$\hat{\zeta}_{zi} = [(1 + X)(1 + \bar{\alpha}_i) + (1 + \bar{\beta}_i)]/[(1 + X)(1 + Y)(1 + \bar{\alpha}_i)$$

$$(1 + \bar{\alpha}_z) - 1] \tag{4.4-40}$$

and

$$\hat{\zeta}_{iz} = [(1 + Y)(1 + \bar{\alpha}_z) + 1]/[(1 + X)(1 + Y)(1 + \bar{\alpha}_i)(1 + \bar{\alpha}_z) - 1] \quad . \tag{4.4-41}$$

Finally,

$$\Gamma_i^{u'E} = -(2\pi/\gamma')^2(1/e_i)[<(I/B)\xi_i^{u'E}\kappa_{i00}^{B_*}\partial(R^{-1}\vec{u}_E^{(0)}\cdot\hat{n}_\phi)/\partial\psi>] \tag{4.4-42}$$

is a component of the radial ion particle flux which arises from the neoclassical gyroviscous force with

$$\xi_i^{u'E} = \hat{\Lambda}_{iz}R^2(\hat{n}_\parallel\cdot\vec{\nabla}B)B^2/(n_i<B^2/n_i>) \tag{4.4-43}$$

and

$$\hat{\Lambda}_{iz} = [(1 + X)(1 + \bar{\beta}_i)(1 + \bar{\alpha}_z)]/[(1 + X)(1 + Y)(1 + \bar{\alpha}_i)(1 + \bar{\alpha}_z) - 1] \tag{4.4-44}$$

and

$$\Gamma_{iV_B}^{\psi} = 2\pi/\gamma'[<(I/B)(\xi_i^V B - \xi_z^V B n_z/n_i)(n_i/e_i)V_{\parallel B}>] \tag{4.4-45}$$

is that component of the total radial particle flux which is driven by the pure beam momentum input with

$$\xi_i^{V_B} = [\bar{\upsilon}_{iB}(1 - \hat{\sigma}_{iz}\langle IBV_{\parallel B}/\langle B^2/n_i\rangle\rangle/\langle In_iV_{\parallel B}/B\rangle)] \tag{4.4-46}$$

$$\xi_z^{V_B} = [\bar{\upsilon}_{zB}(\bar{\nu}_{zB}/\bar{\upsilon}_{zB} - \hat{\sigma}_{zi}\langle IBV_{\parallel B}/\langle B^2/n_z\rangle\rangle/\langle In_zV_{\parallel B}/B\rangle)] \tag{4.4-47}$$

$$\hat{\sigma}_{iz} = [(1 + Y)(1 + \bar{\beta}_i)(1 + \bar{\alpha}_z) - 1]/[(1 + X)(1 + Y)(1 + \bar{\alpha}_i)(1 + \bar{\alpha}_z) - 1] \tag{4.4-48}$$

and

$$\hat{\sigma}_{zi} = [(1 + X)(1 + \bar{\alpha}_i) - (1 + \bar{\beta}_i)]/[(1 + X)(1 + Y)(1 + \bar{\alpha}_i)(1 + \bar{\alpha}_z) - 1] \ . \tag{4.4-49}$$

To expose the physical content of eq.(4.4-21), a number of simplifications will be made. In particular, the large aspect ratio/low-beta approximation (collisional coupled) is assumed, therefore $(\bar{f}_T^B/\bar{f}_c^B) << 1$ implying that

$$\bar{f}_T^B\bar{\eta}_i^{\perp}/\bar{\eta}_i^B = (\bar{f}_T^B/\bar{f}_c^B)/(\bar{\eta}_i^s/\bar{\eta}_i^{\perp} + (\bar{f}_T^B/\bar{f}_c^B)) \to 0 \tag{4.4-50}$$

$$\bar{f}_c^B\bar{\eta}_i^s/\bar{\eta}_i^B = 1/(1 + (\bar{f}_T^B/\bar{f}_c^B)(\bar{\eta}_i^{\perp}/\bar{\eta}_i^s)) \to 1 \tag{4.4-51}$$

$$\bar{f}_c^B/\bar{\eta}_i^B = 1/(\bar{\eta}_i^{\perp}[\bar{\eta}_i^s/\bar{\eta}_i^{\perp} + (\bar{f}_T^B/\bar{f}_c^B)]) \to 1/\bar{\eta}_i^s \tag{4.4-52}$$

and

$$\{\bar{\eta}_{zi}^s\} \cong \bar{\eta}_{zi}^s \cong 4m_z\Gamma_{zi}/(3\sqrt{\pi}m_i v_{ti}^3). \tag{4.4-53}$$

Furthermore since $m_i/m_z << 1$ then

$$\bar{\nu}_{iz} \to \{\bar{\eta}_{iz}^s\} \tag{4.4-54}$$

$$\bar{\nu}_{zi} \to \{\bar{\eta}_{zi}^s\} = \bar{\eta}_{zi}^s \tag{4.4-55}$$

$$\bar{\eta}_{iz} \to \bar{\nu}_{iz} = \{\bar{\eta}_{iz}^s\} \to \bar{\eta}_{zi}^s \tag{4.4-56}$$

$$\bar{\upsilon}_{iB} = \bar{\gamma}_{iB} - \bar{\lambda}_{iB} \to (\{\bar{\gamma}_{iB}^s\bar{\eta}_{iz}^s/\bar{\eta}_i^s\} - \{\bar{\eta}_{iz}^s\}\{\bar{\gamma}_{iB}/\bar{\eta}_i^s\}) - \bar{\lambda}_{iB} \tag{4.4-57}$$

$$\bar{\gamma}_{zB} \to 0 \ . \tag{4.4-58}$$

To further simplify the impending analysis, the large aspect ratio/low beta limit coordinate basis $\{r,\theta\}$ will be used where

$$\vec{B} = \bar{B}\hat{n}_{\parallel}/(1 + \varepsilon\cos\theta) = \langle B\rangle\hat{n}_{\parallel}/(1 + \varepsilon\cos\theta) \tag{4.4-59}$$

$$n_a = \bar{n}_a(1 + \tilde{n}_a^c\cos\theta + \tilde{n}_a^s\sin\theta) \tag{4.4-60}$$

$$(I/B)^2 \cong R^2 = \bar{R}^2(1 + \varepsilon\cos\theta) \tag{4.4-61}$$

with

$$\varepsilon = r/\bar{R} \tag{4.4-62}$$

and

$$\tilde{n}_a^c/n_a \sim \tilde{n}_a^s/n_a << 1 \quad . \tag{4.4-63}$$

In view of these simplifications, the lowest order pressure gradient driven component of the radial impurity ion flux can be obtained by combining eqs.(4.4-52) through (4.4-63) with eqs.(4.4-22) through (4.4-30) and interchanging the indices i and z to give

$$\Gamma^{\psi}_{zp'} \cong -m_z\bar{n}_z\{\bar{\eta}^s_{zi}\}\bar{R}/(e_z\bar{B}_\theta)[(1 + \bar{\beta}_z)/(e_z\bar{n}_z)[1 - (\hat{\alpha}_{zi} + \hat{\beta}_{zi}) + 2\varepsilon^2[1 + \tilde{n}^c_z/(4\varepsilon)(1 + [\hat{\alpha}_{zi} + \hat{\beta}_{zi}])]]\partial p_z/\partial r - 1/(e_i\bar{n}_i)[1 - (\hat{\alpha}_{iz} + \hat{\beta}_{iz}) + 2\varepsilon^2[1 + \tilde{n}^c_i/(4\varepsilon)(1 + [\hat{\alpha}_{iz} + \hat{\beta}_{iz}])]]\partial p_i/\partial r] \quad . \tag{4.4-64}$$

In essence, the above expression encompasses both the Pfirsch-Schluter and banana-plateau fluxes of the usual transport theory, but now modified to account for the beam

induced radial transfer of momentum and the poloidal variations in the main ion and impurity densities over a flux surface. For a negative main ion density gradient ($\partial p_i/\partial r < 0$) the impurity ion pressure gradient driven component of the total radial flux will be inward since $|\partial p_i/\partial r| \sim e_z/e_i|\partial p_z/\partial r|$. Note here that in the collisional limit ($\hat{\alpha}_{iz} = \hat{\beta}_{zi} = 1$; $\hat{\beta}_{iz} = \hat{\alpha}_{zi} = 0$) and therefore

$$\Gamma^{\psi}_{zp'} \cong -2\varepsilon^2 m_z \bar{n}_z \{\bar{\eta}^s_{zi}\}\bar{R}/(e_z\bar{B}_\theta)[(1 + \bar{\beta}_z)/(e_z\bar{n}_z)[1 + \tilde{n}^c_z/(2\varepsilon)]$$
$$\partial p_z/\partial r - 1/(e_i\bar{n}_i)[1 + \tilde{n}^c_i/(2\varepsilon)]\partial p_i/\partial r] \quad . \tag{4.4-65}$$

Defining the physical Pfirsch-Schluter flux such that

$$\langle n_z V_z \rangle_{ps} = \Gamma^{\psi}_{zp'}/(\bar{R}\bar{B}_\theta) \tag{4.4-66}$$

then

$$\langle n_z V_z \rangle_{ps} = -2\varepsilon^2 m_z \bar{n}_z \{\bar{\eta}^s_{zi}\}/(e_z\bar{B}^2_\theta)[(1 + \bar{\beta}_z)/(e_z\bar{n}_z)[1 + \tilde{n}^c_z/(2\varepsilon)]$$
$$\partial p_z/\partial r - 1/(e_i\bar{n}_i)[1 + \tilde{n}^c_i/(2\varepsilon)]\partial p_i/\partial r] \tag{4.4-67}$$

which is in good agreement with that obtained by Stacey and Sigmar [47]. Likewise in the slow rotation limit $\bar{\beta}_z \sim \bar{\beta}_i \sim \tilde{n}^c_z \sim \tilde{n}^c_i \to 0$ and the conventional result is recovered as expected.

Now with respect to the radial electric field component of the cross field impurity ion flux, the large aspect ratio/low beta limit gives

$$\Gamma^{\psi}_{z\phi'} \cong m_z\bar{n}_z\{\bar{\eta}^s_{zi}\}\bar{R}/e_z[(1+\bar{\beta}_z)[1-(\hat{\alpha}_{zi}+\hat{\beta}_{zi})+2\epsilon^2(1+\tilde{n}^c_z/\epsilon)]$$
$$-[1-(\hat{\alpha}_{iz}+\hat{\beta}_{iz})+2\epsilon^2(1+\tilde{n}^c_i/\epsilon)]]\bar{E}_r/\bar{B}_\theta \ . \tag{4.4-68}$$

In effect this term will have the same sign as the radial electric field. Consequently this flux component will be outward (inward) for beam co-injection (counter-injection). Note here that in the slow rotation limit this component vanishes as it must in the absence of drags.

Similarly, the flux component driven by the centrifugal force can be expressed in the large aspect/low beta limit approximation as follows:

$$\Gamma^{\psi}_{zu_E'} \cong -m_z\bar{n}_z\{\bar{\eta}^s_{zi}\}\bar{R}/(e_z\bar{B})[(1+\bar{\beta}_z)[1-(\hat{\alpha}_{zi}+\hat{\beta}_{zi})+2\epsilon^2(1+$$
$$\tilde{n}^c_z/\epsilon)](m_z/e_z)-[1-(\hat{\alpha}_{iz}+\hat{\beta}_{iz})+2\epsilon^2(1+\tilde{n}^c_i/\epsilon)](m_i/e_i)]$$
$$[\partial(u_E^{(0)2}/2)/\partial r-(R^{-1}\vec{u}_E^{(0)}\cdot\hat{n}_\phi)\partial(\bar{R}\vec{u}_E^{(0)}\cdot\hat{\bar{n}}_\phi)/\partial r] \ . \tag{4.4-69}$$

Here

$$\partial(u_E^{(0)2}/2)/\partial r-(R^{-1}\vec{u}_E^{(0)}\cdot\hat{n}_\phi)\partial(\bar{R}\vec{u}_E^{(0)}\cdot\hat{\bar{n}}_\phi)/\partial r=\hat{n}_r\vec{u}_E^{(0)}:\vec{\nabla}\vec{u}_E^{(0)}$$
$$=-\omega_{-1}^2(\psi)(\hat{n}_r\cdot\vec{R}) \tag{4.4-70}$$

where the direction of the radius vector $\vec{R}$ is such that $\hat{n}_z \times \vec{R} = R\hat{n}_\phi$ where the unit vector $\hat{n}_z$ defines the symmetry axis of rotation. In the context of eq.(4.4-70)

$$\Gamma^{\psi}_{zu_{\hat{E}}} \cong m_z\bar{n}_z\{\bar{\eta}^s_{zi}\}\bar{R}/(e_z\bar{B}_\theta)[(1 + \bar{\beta}_z)[1 - (\hat{\alpha}_{zi} + \hat{\beta}_{zi}) + 2\varepsilon^2(1 + \tilde{n}^c_z/\varepsilon)](m_z/e_z) - [1 - (\hat{\alpha}_{iz} + \hat{\beta}_{iz}) + 2\varepsilon^2(1 + \tilde{n}^c_i/\varepsilon)](m_i/e_i)] [\omega^2_{-1}(\psi)(\hat{n}_r\cdot\vec{R})] . \tag{4.4-71}$$

This component of the impurity ion radial flux will be directed outward, the magnitude of which will be dictated by the size of the ratio

$$[m_z(1 + \bar{\beta}_z)/e_z]/(m_i/e_i) . \tag{4.4-72}$$

Combining eq(4.4-68) with (4.4-71) yields

$$\Gamma^{\psi}_{z\hat{E}_r} \cong m_z\bar{n}_z\{\bar{\eta}^s_{zi}\}\bar{R}/(e_z\bar{B}_\theta)[(1 + \bar{\beta}_z)[1 - (\hat{\alpha}_{zi} + \hat{\beta}_{zi}) + 2\varepsilon^2(1 + \tilde{n}^c_z/\varepsilon)]\hat{E}^z_r - [1 - (\hat{\alpha}_{iz} + \hat{\beta}_{iz}) + 2\varepsilon^2(1 + \tilde{n}^c_i/\varepsilon)]\hat{E}^i_r] \tag{4.4-73}$$

where

$$\hat{E}^a_r = \hat{n}_r\cdot[\vec{E} + (m_a/e_a)\omega^2_{-1}(\psi)\vec{R}] \tag{4.4-74}$$

is the effective radial electric field vector. It is therefore apparent from the functional structure of eq.(4.4-74)

that the outward convective flux arising from the effective radial electric field is one of the largest contributions to the net radial impurity flux during beam co-injection.

The next component of the total impurity ion cross field flux is the convective inertial flux component which in the large aspect ratio/low beta limit becomes

$$\Gamma^{\psi}_{zI} \approx \varepsilon^2 m_z \bar{n}_z \bar{R}/(e_z \bar{B}_\theta)[[\tilde{n}^s_z \hat{E}^z_r - (m_i \bar{n}_i/(m_z \bar{n}_z)\tilde{n}^s_i \hat{E}^i_r]/\varepsilon^2 - [1/(e_z \bar{n}_z)$$
$$[(\tilde{n}^s_z/\varepsilon^2)\partial \bar{p}_z/\partial r - (m_i/m_z)(e_z/e_i)(\tilde{n}^s_i/\varepsilon^2)\partial \bar{p}_i/\partial r]]]\partial(R^{-1}\vec{u}^{(0)}_E \cdot \hat{n}_\phi)/\partial r \ . \tag{4.4-75}$$

Since the inertial flux is actually due in large part to the effective radial electric field, this component will produce an outward impurity flux during beam co-injection. Conversely for strong counter-injection, the inward contribution due to the pressure gradient and electrostatic potential gradient driven components of the effective radial electric field offset the outward centrifugal component of the effective radial electric field thereby yielding a net inward flux component during this mode of beam injection.

The neoclassical gyroviscous component of the total impurity ion transport flux is not in present when the impurity ions are in the collisional regime. However, there is a contribution to the main ion transport flux from this component. In essence, this is another new term which emerges as a consequence of strong beam induced plasma

rotation. In the large aspect ratio/low beta limit

$$\Gamma_{id}^{\psi} \cong -q\varepsilon^2\bar{R}\hat{\eta}_{dil}\hat{\Lambda}_{iz}(\tilde{n}_i^s/\varepsilon^2)\partial(R^{-1}\vec{u}_E^{(0)}\cdot\hat{n}_\phi)/\partial r \tag{4.4-76}$$

where

$$q = \varepsilon\bar{B}_\phi/\bar{B}_\theta \tag{4.4-77}$$

and

$$\hat{\eta}_{dil} = \eta_{dil}\{x_i^2 O_p[x_i^2 P_1^2(V_\parallel/V)]\}. \tag{4.4-78}$$

Note here that in contrast to the gyroviscous drag force which arises from the gyroangle dependent component of the particle distribution function and is dependent on the poloidal gradient of the angular frequency of rotation, the neoclassical component of the gyroviscous force is proportional to the radial gradient of the toroidal angular frequency of rotation, vice the poloidal gradient. This component is outward (inward) for a beam co-injection (counter-injection).

Finally in the large aspect ratio/low beta limit, the flux component which is driven by the direct collisional interaction between the beam ions and the background plasma ions and impurities becomes

$$\Gamma^{\psi}_{zV_B} \approx -\bar{n}_z\bar{\lambda}_{zB}/(e_z\bar{B}_\theta^2)[[(1 - \hat{\sigma}_{zB}) - (\bar{n}_i/\bar{n}_z)(\bar{\gamma}_{iB}/\bar{\lambda}_{zB} - \bar{\upsilon}_{iB}\hat{\sigma}_{iB}/\bar{\lambda}_{zB})] - \varepsilon^2/2[(1 - \hat{\sigma}_{zB})(1 + \tilde{n}_z^c/\varepsilon) - (\bar{n}_i/\bar{n}_z)(\bar{\gamma}_{iB}/\bar{\lambda}_{zB} - \bar{\upsilon}_{iB}\hat{\sigma}_{iB}/\bar{\lambda}_{zB})(1 + \tilde{n}_i^c/\varepsilon)]]\langle IV_{\parallel B}B\rangle \quad . \tag{4.4-79}$$

This contribution to the total radial impurity ion flux is inward (outward) for beam co-injection (counter-injection). This result is again in good agreement with Stacey and Sigmar [47,67].

Examination of eqs.(4.4-16) and (4.4-17) indicates that the poloidal rotation of the main ions will be positive (negative) for beam co-injection (counter-injection) whereas the poloidal rotation of the impurity ions will be just the opposite. Furthermore, although the main ions and impurities will both rotate toroidally in the direction of the NBI momentum input, the main ions will rotate faster since the beam collisional momentum will be preferentially to the main ions and the usual negative main ion pressure gradient will increase (decrease) the difference in the toroidal flow velocities between the main ions and impurities for beam co-injection (counter-injection). However, as the mass to charge ratio of the impurity ions increases in comparison to the main ions, then the difference in the toroidal flows decreases somewhat. Likewise, the neoclassical gyroviscous component of the ion toroidal flow also tends to decrease this difference in the main ion and impurity ion flows .

To completely specify the cross field impurity ion flux, the lowest order poloidal variations in the particle densities and electrostatic field must be solved for and the radial electric field component must be self-consistently determined. In particular, the poloidal variations in the particle densities and electrostatic potential on a flux surface can be obtained from a simultaneous solution of the parallel component of the momentum balance equation for each species and demanding that the solutions be constrained to satisfy charge neutrality. Likewise the radial electric field component can be evaluated from the flux surface averaged toroidal momentum balance equation summed over all species. Both of these mathematical processes for a two species ion-impurity beam injected plasma have already been done by Stacey and Sigmar [67] and therefore will not be reproduced here since the purpose of this section is a qualitative analysis of the impurity ion cross field flux as developed from the extended transport theory and fluid equations. However for the sake of completeness a few of their results, which are applicable to this analysis, will be mentioned. In particular, it was shown that for a negative main ion pressure gradient beam co-injection (counter-injection) would produce a downward shift in $\tilde{n}_z^s$ or negative $\tilde{n}_z^s$ (upward shift in $\tilde{n}_z^s$ or positive $\tilde{n}_z^s$) and an outward shift in $\tilde{n}_z^c$ or positive $\tilde{n}_z^c$ (inward shift in $\tilde{n}_z^c$ or negative $\tilde{n}_z^c$). Furthermore, it was shown that the radial

electric field scales as the ratio of the NBI input to the drag frequency and is relatively insensitive to the neoclassical viscosity coefficients. Also it was shown that the radial electric field is outward (inward) for beam co-injection (counter-injection) since its largest contributor is the pure beam momentum input itself.

In essence, the radial impurity ion flux is essentially determined by the pressure gradient component, the direct beam momemtum input component, the rotational inertia component and the effective radial electric field component. With beam counter-injection, the diffusive impurity fluxes (i.e. Pfirsch-Schluter and banana-plateau fluxes), the rotational component, and electrostatic potential component of the effective radial electric field are all inward and additive. Here, the direct beam momentum input flux component and the centrifugal force component of the effective radial electric field are outward. Although the net flux is inward and therefore results in impurity ion accumulation at the plasma center, the magnitude of this net flux will be smaller than that predicted by other theories [44] which is good since these theories overpredicted the influx of heavy impurity ions during beam counter-injection [64]. With increasing co-injection, the convective rotational and effective radial electric field components become outward and eventually become large enough to offset the inward pressure and direct beam momentum input components

thereby resulting in impurity ion flow reversal. Comparison of the qualatitive results obtained in this section agree with the experimental data presented in section 4.3 of this chapter in that the effects of neutral beam injection is to increase the inward impurity flow for counter-injection, while co-injection leds to a significantly smaller inward flux and in some cases a net outward transport of impurity ion (flow reversal).

$$R = R_0(1 + \varepsilon\cos\theta)$$

$$B = B_o/(1 + \varepsilon\cos\theta)$$

$$(B_\theta/B_\phi)^2 << 1$$

$$\varepsilon = r/R_0 << 1$$

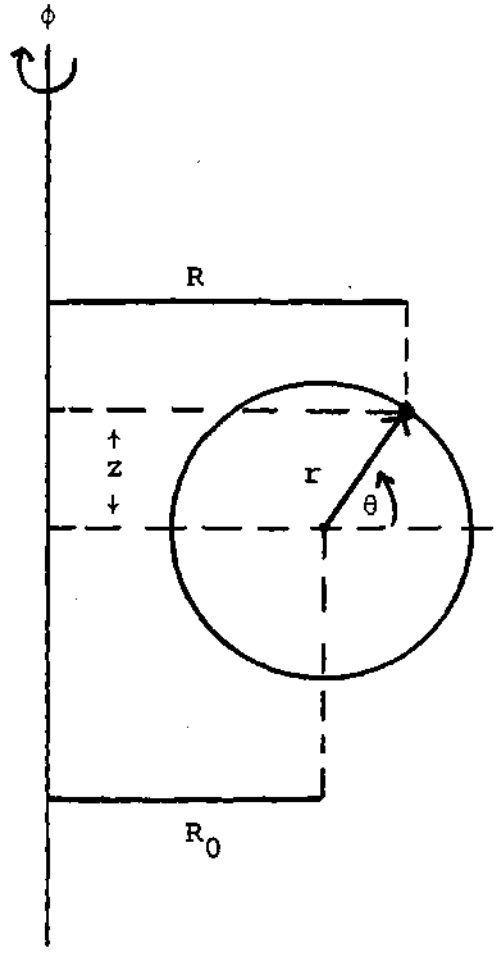

FIGURE (4.4-1)

THE LARGE ASPECT RATIO/LOW BETA LIMIT COORDINATE SYSTEM

CONCLUSIONS

The neoclassical theory of ion transport characterizing a strongly rotating beam injected plasma has been formulated. To account for the large particle flow velocities commonly encountered in beam injected plasmas, the kinetic transport equations were developed with respect to a coordinate frame which is moving with the plasma. The drift kinetic equation was shown to be a simple generalization of the kinetic equation valid for non-rotating plasmas with the radial gradient of the toroidal angular velocity appearing as a driving term like the temperature. Linearization of the kinetic equations was accomplished by expanding the particle distribution function, electrostatic potential and particle flow in powers of the gyroradius parameter. It was shown that the initial (zeroth in δ) response of the plasma to external beam injection is to rotate rigidly with a nonuniform ion density on a magnetic surface having a poloidal variation which is given by the Boltzmann factor. Since the total system Hamiltonian is a function of the effective electrostatic potential, then the zeroth electrostatic potential, which is required for charge neutrality, becomes poloidally dependent. As the rotation sequence proceeds to time scales greater than the ion thermalization and decay of the poloidal flow, the beam induced polarization and collisional effects accelerate the

plasma to its terminal velocity. The ensuing centrifugal inertial effects give rise to a distortion in the uniform toroidal flow, the magnitude of which is somewhere between zeroth and first order in δ . As a result, the toroidal mass flow inherits a poloidal character. It was shown that the $O(\delta^1)$ gyroangle dependent component of the kinetic transport equation embodies a term which is proportional to the poloidal gradient of the angular speed of rotation and is responsible for the lowest order transport of angular momentum across the magnetic flux surfaces (gyroviscous drag).

The collisional response of the plasma to intense momentum injection is obtained by use of a linearized Fokker-Planck collision operator which accounts for both the direct and indirect effects of beam particle collisions with the background plasma species. This operator is used in the $O(\delta^1)$ drift kinetic equation to obtain a solution for the gyroaveraged component of the particle distribution function in all collision frequency regimes. In this regard, it was shown that in the long mean free path regime the particle trapping due to the effective electrostatic potential could be as important as the magnetic field particle trapping thereby modifying the corresponding fraction of trapped particles. Similiarly it was shown that in the plateau regime the effective electrostatic field also modified the fraction of resonant particles.

The lowest order friction-flow and parallel stress constitutive relationships were computed from a knowledge of the $O(\delta^1)$ gyroangle dependent and gyrotropic components of the particle distribution function. It was shown that the mixed regime friction-flow relationships can be expressed in terms the hydrodynamic and beam flows with the friction coefficients containing a component which is independent of the magnetic field structure, and therefore valid for all neoclassical frequency regimes, and a beam induced distortion coefficient which is regime dependent. Furthermore it was shown that the parallel stress forces are a manisfestation of two effects, namely the nonuniformities of the tangential components (gradient components within a magnetic surface) of the hydrodynamic flows fields and nonuniformities in the particle flow fields in the radial direction. The first effect is similar in nature to the conventional result in that the poloidal component of the hydrodynamic flows are dampened by the parallel viscosity. However, the parallel stress coefficients are significantly different since they posses beam induced distortion effects. In addition, the plateau and banana regimes are characterized by a neoclassical gyroviscous force which arises from the radial gradient of the angular frequency of rotation. Since this flow is directed tangential to the magnetic flux surfaces, its effect is to counteract the poloidal component of the diamagnetic drifts arising from the fictitious forces

resulting in a parallel viscous drag.

The second effect results from the appearance of off-diagonal terms which orginate from the poloidal variations in the toroidal component of the particle flow within a magnetic flux surface. This departure from rigid body rotation results in a transfer of angular momentum across the magnetic flux surfaces.

The extended transport theory was used in conjunction with the fluid equations to obtain an expression for the radial particle flux for a mixed regime beam injected plasma composed of a high Z impurity ion and a dominant hydrogenic ion species. It was shown that for a normal negative main density gradient the diffusive impurity fluxes (i.e. Pfirsch-Schluter and banana-plateau fluxes) and direct beam momentum input fluxes are inward (outward for the beam momentum input component only) for beam co-injection (counter-injection), whereas the rotational and radial electric field contributions to the convective impurity flux are outward (inward) for strong co-injection. In addition, two new flux components emerged which resulted from the radial gradient of the toroidal angular velocity. One of the components, which is driven by the centrifugal force, is directed outward independent of the sense (co-injection or counter-injection) of injection, with the magnitude of this component being dictated primarily by the particle mass to charge ratio. The second component is a neoclassical gyro-

viscous force driven by the radial gradient in the toroidal angular frequency of rotation. This component, which is dependent on the direction of injection, is outward (inward) for beam co-injection (counter-injection). A qualitative comparison of the results obtained from the extended transport theory exhibited features in agreement with experimental observations and therefore provides a reseasonable basis for the interpretation of the rotation, momentum confinement and impurity ion flow reversal experiments.

APPENDIX A

THE LOWEST ORDER EFFECTS OF A POLARIZATION FIELD ON A PARTICLE'S GUIDING CENTER MOTION ALONG THE MAGNETIC FIELD LINES

In this appendix the lowest order particle guiding center motion along the magnetic field lines is calculated for a strongly rotating beam injected plasma. To make the desired computation, the particle's velocity vector as seen by an observer in the lab frame can be expressed as follows:

$$\vec{v} = (r d\theta/dt)\hat{n}_\theta + R\omega_{-1}(r,t)\hat{n}_\phi \ . \tag{A-1}$$

Selecting the parallel component of eq.(A-1) and time averaging the result yields

$$<(\hat{n}_\parallel \cdot \vec{v})>_\tau = 2\pi qR/\tau + R<\omega_{-1}(r,t)>_\tau \tag{A-2}$$

where $<\cdots>_\tau$ is the time averaging operator,

$$q = rB/(R(\vec{B}\cdot\hat{n}_\theta)) \tag{A-3}$$

is the tokamaks safety factor and

$$<d\theta/dt> = \begin{pmatrix} 0 & \text{Trapped Particles} \\ \pm 2\ qR/\tau & \text{Untrapped Particles} \end{pmatrix} \tag{A-4}$$

$$\tau = \S dt = \S d\theta/(d\theta/dt) \tag{A-5}$$

is the peroid of the motion. To obtain an expression for the time rate of change of the poloidal angle, one can employ the concepts of classical dynamics. In particular, the parallel force balance equation can be constructed from the parallel component of eq.(A-1) and the resulting expression integrated over the poloidal angle to give the energy equation

$$\int(\hat{n}_{\parallel}\cdot\vec{F}_a)d\theta = -U(\theta) = m_a[\int qR(d\theta/dt)(d(d\theta/dt) + \int R(\omega_{-1}(r,t)$$

$$/dt)d\theta]$$

or

$$m_a qR(d\theta/dt)^2/2 = -U(\theta) - m_a R(d\omega_{-1}(r,t)/dt)\theta + H \tag{A-6}$$

where $U(\theta)$ is the potential energy of the particle as seen by an observer in the frame moving with the plasma and H is the system Hamiltonian which is a constant of the motion since the system Lagrangian is cyclic in time.

To compute the potential energy function in the frame moving with the plasma, recall that at this point in the plasma rotational sequence the acceleration of the particles

guiding center along the magnetic field lines arises primarily from the parallel components of the gradient in the magnetic field and the electric forces. As a result,

$$U(\theta) = -m_a \int (d(\hat{n}_{\parallel} \cdot \vec{V})/dt) d\theta = \int [\mu(\hat{n}_{\parallel} \cdot \vec{\nabla} B) - e_a(\hat{n}_{\parallel} \cdot \vec{E})] d\theta$$
$$-(\mu \delta B \cos\theta/(2qR) + e_a E_{\parallel}) \tag{A-7}$$

where here the large aspect ratio limit ($\varepsilon = r/R_0 << 1$) has been used with $\delta B = 2\langle B^2 \rangle^{1/2} r/R$ being a measure of the magnetic modulations across the minor diameter. Combining eqs.(A-7) with (A-6) and solving for $d\theta/dt$ yields

$$d\theta/dt = [2/(m_a qR)[H + (\mu \delta B \cos\theta/(2qR) + e_a E_{\parallel}) - m_a R(d\omega_{-1}(r,t)$$
$$/dt)\theta]]^{1/2} . \tag{A-8}$$

In view of eq.(A-8), the peroid of the motion can now be calculated from eq.(A-5). In this regard, the Hamiltonian can be eliminated from eq.(A-8) by use of the initial conditions: at $t = 0$; $\theta = 0$ and $d\theta/dt = [V_{\parallel}(t=0) - R\omega_{-1}(t=0)]/qR$ to give

$$d\theta/dt \cong [[(2/\alpha_a^2 - 1) + \cos\theta]\mu \delta B/(m_a (qR)^2)]^{1/2} \tag{A-9}$$

where

$$\alpha_a = [2\mu\delta B/[m_a(v_\parallel(t=0) - R\langle\omega_{-1}(r,t)\rangle_\tau)^2]]^{1/2} \tag{A-10}$$

and the term $2\theta[e_a E_\parallel - m_a R d\omega_{-1}(\psi)/dt]/(m_a qR)$ has been neglected in obtaining eq.(A-9) since to the lowest order approximation the initial parallel kinetic energy of the particle in the coordinate frame moving with the plasma is greater than the work done by the accelerating force in one transit peroid. Finally, carrying out the indicated time averaging operation gives

$$= 4qRK(\alpha_a)/|v_\parallel(t=0) - R\langle\omega_{-1}(r,t)\rangle_\tau| \tag{A-11}$$

and therefore

$$\langle(\hat{n}_\parallel\cdot\vec{v})\rangle_\tau = v_\parallel(t=0)I[\alpha_a]\delta_c + R\langle\omega_{-1}(r,t)\rangle_\tau(1 - I[\alpha_a]\delta_c) \tag{A-12}$$

where $K(\alpha_a)$ is an elliptic integral operator defined such that

$$K_a(\alpha_a) = \int_0^1[(1 - t^2)(1 - \alpha_a t^2)]^{-1/2}dt \tag{A-13}$$

and the integral operator $I[A]$ is defined such that

$$I[\alpha_a] = \pi/(2K(\alpha_a)) = \pi/(2[\int_0^1[(1 - t^2)(1 - \alpha_a t^2)]^{-1/2}dt]) \tag{A-14}$$

APPENDIX B

LOWEST ORDER ASYMMETRIC VELOCITY SPACE DISTORTIONS IN THE ION DISTRIBUTION FUNCTION DUE TO UNIDIRECTIONAL NEUTRAL BEAM INJECTION

Experimental observations [123] on ISX-B have shown that unidirectional injection of neutral beam ions causes an asymmetric distortion of the thermal ion distribution function. In particular, when neutral beam ions were co-injected both clockwise and counterclockwise into ISX-B, the charge exchange spectra taken perpendicular, parallel and antiparallel to the direction of injected indicated that there appeared to be a distortion of the lowest order (Maxwellian) ion distribution function in the direction parallel to that of the neutral beam injection but no distortion in the antiparallel and perpendicular direction. The purpose of this appendix is to provide a theoretical explanation of this observed distortion.

The lowest order response of the thermal ion distribution function to collisional momentum exchange with the energetic beam ions can most easily be understood by examining the fundamental velocity space equation

$$\vec{F}_{iB}\cdot\vec{\nabla}_V f_{i0}/m_i = \sum_b C_{ib}(f_i, f_b) \tag{B-1}$$

where

$$\vec{F}_{iB} = \overline{d\vec{p}_i/dt} = m_i \Gamma_{iB} \vec{\nabla}_V h_{iB} \tag{B-2}$$

is the average force exerted on the thermal ions as a result of collisions with the beam ions,

$$f_{i0} = n_i/(\pi^{3/2} v_{ti}^3)\, e^{-(V/v_{ti})^2} \tag{B-3}$$

is a local Maxwellian and

$$C_{ib}(f_i, f_b) = -\vec{\nabla}_V \cdot (\Gamma_{ib} f_i \vec{\nabla}_V h_{ib}(V)) + \vec{\nabla}_V \vec{\nabla}_V : (\Gamma_{ib} f_i \vec{\nabla}_V \vec{\nabla}_V g_{iB}(V))/2 \tag{B-4}$$

is the Fokker-Planck collision operator with

$$\Gamma_{ib} = (e_i e_b)^2 \ln\Lambda/(4\pi\varepsilon_0^2 m_i^2) \tag{B-5}$$

Note here that since the plasma ions are often supersonic when sujected to beam injected, eqs.(B-1) through (B-4) have been referenced to a coordinate frame moving with the plasma. Using the results of Appendix E and F in conjunction with eq.(B-4) gives

$$C_{ib}(f_i, f_b)/f_{i0} = \Gamma_{ib}[(I_{ib}^{(\ell)}(V)\overleftrightarrow{F}_i^{(\ell)})/f_{i0} + \overleftrightarrow{S}_{ib}^{(\ell)}(V)]_{\ell} \cdot \vec{V}^{(\ell)}/V^{(\ell)} \tag{B-6}$$

where

$$\overleftrightarrow{I}^{(\ell)}_{ib}(v) = 4\pi m_i \overleftrightarrow{F}^{(\ell)}_{b1}/m_b + 2/v^2_{ti}[(2v^2/v^2_{ti} - 1)([\ell + 1][\ell + 2]$$

$$(\overleftrightarrow{\alpha}^{(\ell)}_{b(\ell+2)} + \overleftrightarrow{\beta}^{(\ell)}_{b-(\ell+1)})/(2v[2\ell + 1][2\ell + 3]) - \ell[\ell - 1](\overleftrightarrow{\alpha}^{(\ell)}_{b(\ell)}$$

$$+ \overleftrightarrow{\beta}^{(\ell)}_{b(1-\ell)})/(2v[2\ell + 1][2\ell - 1]) + [\ell + 1]([\ell + 2]\overleftrightarrow{\alpha}^{(\ell)}_{b(\ell+2)}$$

$$- [3\ell + 4]\overleftrightarrow{\beta}^{(\ell)}_{b-(\ell+1)})/(2v[2\ell + 1][2\ell + 3]) - \ell([1 - 3\ell]\overleftrightarrow{\alpha}^{(\ell)}_{b(\ell)}$$

$$+ [\ell - 1]\overleftrightarrow{\beta}^{(\ell)}_{b(1-\ell)})/(2v[2\ell + 1][2\ell - 1]) + m_i([\ell + 1]\overleftrightarrow{\alpha}^{(\ell)}_{b(\ell)} -$$

$$\ell\overleftrightarrow{\beta}^{(\ell)}_{b-(\ell+1)})/(2m_b v[2\ell + 1])] \tag{B-7}$$

and

$$I^{(\ell)}_{ib}(V) = K^{(\ell)}_{0ib}(V) + K^{(\ell)}_{1ib}(V)(\vec{V}/V)\cdot\vec{\nabla}_V + K^{(\ell)}_{2ib}(V)(\vec{V}\vec{V}/V^2):\vec{\nabla}_V\vec{\nabla}_V \tag{B-8}$$

with

$$K^{(\ell)}_{0ib}(V) = 4\pi m_i f_{b0}/m_b + \ell[\ell + 1](-3\alpha^{(0)}_{b(0)} + \alpha^{(0)}_{b(2)} - 2\beta^{(0)}_{b(-1)})/$$

$$(6V^3) \tag{B-9}$$

$$K^{(\ell)}_{1ib}(V) = m_i\alpha^{(0)}_{b(0)}/m_b - (\alpha^{(0)}_{b(2)} - 2\beta^{(0)}_{b(1)})/(3V) \tag{B-10}$$

and

$$K^{(\ell)}_{2ib}(V) = (\alpha^{(0)}_{b(0)} + \beta^{(0)}_{b(-1)})/(3V) \tag{B-11}$$

Equation (B-6) can be simplified by noting that since the field response component of the collision operator scales as ℓ^{-2} times the test particle component of the collision operator, then for harmonics $\ell \geq 2$ the velocity space driving term, which is responsible for the lowest order distortion effects, must be at least four times greater than the pitch angle scattering term. As a result, the $\ell = 1$ harmonic component of eq.(6) is adequate for the lowest order approximation considered here. In view of this result, eq.(6) reduces to the following:

$$\sum_b C_{ib}(f_i, f_b) \cong \sum_b \Gamma_{ib}[\vec{V}\cdot(I_{ib}^{(1)}(V)\vec{F}_i^{(1)}/(Vf_{i0}) + \vec{S}_{ib}^{(1)}(V)/V] \tag{B-12}$$

where $I_{ib}^{(1)}(V)$ is given by eqs.(B-8) through (B-11) for $\ell = 1$ and

$$\vec{S}_{ib}^{(1)}(V) = 4\pi m_i \vec{F}_{b1}^{(1)}/m_b + 2/v_{ti}^2[(2V^2/v_{ti}^2 - 1)(\vec{\alpha}_{b(3)}^{(1)} + \vec{\beta}_{b(-2)}^{(1)})/(5V) + 1/(15V)(3\vec{\alpha}_{b(3)}^{(1)} - [5 - 10m_i/m_b]\vec{\alpha}_{b(1)}^{(1)} - [7 - 5m_i/m_b]\vec{\beta}_{b(-2)}^{(1)})] \ . \tag{B-13}$$

To further specify eq.(B-13), the individual collision operators which comprise the vector functions of this equation must be functionally quantified. In particular for ion-electron collisions

$$I_{ie}^{(1)}(V)\vec{F}_i^{(1)} = \alpha_{e(-1)}^{(0)}/(3V)(\vec{V}\cdot\vec{\nabla}_V[V^3\vec{V}\cdot\vec{\nabla}_V(\vec{F}_i^{(1)}/V)]) + m_i\alpha_{e(0)}^{(0)}$$
$$\vec{V}\cdot\vec{\nabla}_V(\vec{F}_i^{(1)}V^3)/(m_eV^6) \tag{B-14}$$

and

$$\vec{S}_{ie}^{(1)}(V) = 2/v_{ti}^2[m_i\vec{\alpha}_{e(-2)}^{(1)}/(3m_eV)] \ . \tag{B-15}$$

For ion collisions with high Z (massive) impurity ions

$$I_{iZ}^{(1)}(V)\vec{F}_i^{(1)} = -\alpha_{Z(0)}^{(0)}\vec{F}_i^{(1)}/V^3 \tag{B-16}$$

and

$$\vec{S}_{iZ}^{(1)}(V) = 2\vec{\alpha}_{Z(1)}^{(1)}/(3Vv_{ti}^2) \ . \tag{B-17}$$

Likewise for ion-ion collisions the appropiate collision operator is given by eqs.(B-7) through (B-11) for $\ell = 1$ and $m_b = m_i$; $\vec{F}_b^{(1)} = \vec{F}_i^{(1)}$. Finally combining eqs.(B-14) through (B-17) with eq.(B-12) and making use of the mass disparity $m_e/m_i << 1$ and $m_i/m_Z << 1$ yields the lowest order equation:

$$-2\vec{V}\cdot\vec{F}_{iB}/(m_iv_{ti}^2) = -\eta_i^s\vec{V}\cdot\vec{F}_i^{(1)}/(Vf_{i0}) + 2\eta_{ii}^s\vec{V}\cdot\vec{L}_{ii}^{(1)}(V)/v_{ti}^2 \tag{B-18}$$

where

$$\eta_i^s = (\eta_{ii}^s + \eta_{iZ}^s) = (\alpha_{i(0)}^{(0)}\Gamma_{ii} + \alpha_{Z(0)}^{(0)}\Gamma_{iZ})/V^3 \tag{B-19}$$

is the total slowing down frequency and

$$\vec{L}_{ii}^{(1)}(V) = \vec{V}\vec{V}\cdot\vec{\nabla}_V[v_{ti}^2 V^4(\alpha_{i(2)}^{(0)} + \beta_{i(-1)}^{(0)})(\vec{V}\cdot\vec{\nabla}_V(\vec{F}_i^{(1)}\cdot\vec{V}/V^2) + 2\vec{V}\cdot\vec{F}_i^{(1)}/v_{ti}^2)]/(6V\alpha_{i(0)}^{(0)}) + 2\pi V v_{ti}^2\vec{F}_i^{(1)}/\alpha_{i(0)}^{(0)} + [(2V^2/v_{ti}^2 - 1)(\vec{\alpha}_{i(3)}^{(1)} + \vec{\beta}_{i(-2)}^{(1)})/(5V) + (\vec{\alpha}_{i(3)}^{(1)}/(5V) + 5\vec{\alpha}_{i(1)}^{(1)}/(3V) - 2\vec{\beta}_{i(-2)}^{(1)})]V/\alpha_{i(0)}^{(0)} \tag{B-20}$$

is a global velocity space vector function which encompasses ion-ion velocity space energy and momentum diffusion effects.

In order to proceed with the computation, the average force exerted on the thermal ions as a result of collisions with the energetic beam ions must be specified. In this regard, recall that the beam ion's velocity must be considerably larger than the background plasma ions in order to drive a distortion in velocity space when $n_B/n_i << 1$. Consequently a distribution function of the form [124]:

$$f_B = S\tau_s\delta(\cos\theta - \cos\theta_B)/(2\pi V^5[1 + \langle Z\rangle(v_c/V)^3]) \tag{B-21}$$

can be used for the energetic beam particles. Here

$$\langle Z\rangle = \sum_j (m_i n_j/(m_j n_e)) Z_j^2 \tag{B-22}$$

S_B is the beam ion source rate and the term θ_B is a fixed angle of injection. Combining eq.(B-21) with (B-2) yields

$$\vec{F}_{iB}\cdot\vec{\nabla}_V f_{i0}/m_i = -2\vec{V}\cdot\vec{F}_{iB}/(m_i v_{ti}^2) f_{i0} = -2\vec{V}\cdot\vec{V}_B(V) f_{i0}/v_{ti}^2 \tag{B-23}$$

where

$$\vec{V}_B(V) = n_B \Gamma_{iB}(1 + m_i/m_B)\cos\zeta\hat{V}/(2\bar{E}_B(V)) \tag{B-24}$$

$$1/\bar{E}_B(V) = 2S\tau_s(n_B m_B V^2)\int_{x_c}^{x_{B0}}(x dx/[(1 - 2x\cos\theta_B + x^2)(1 + (\gamma_c x)^3)]) \tag{B-25}$$

$$\gamma_c = v_c/V \tag{B-26}$$

and $x = V/V_B$; $x_c = V/v_c$; $x_{B0} = V/v_{B0}$; with v_c being the critical velocity, v_{B0} being the initial beam ion velocity and $\cos\zeta = \vec{V}\cdot\vec{V}_r$ being the angle between the ion's velocity and the relative velocity $\vec{V}_r = \vec{V} - \vec{V}_B$.

With the functional structure of the ion-beam particle collisional effects formally established, eq.(B-18) can be combined with eq.(B-23), the v moment of the resulting

equation selected to eliminate the global velocity function $L_{ii}^{(1)}(V)$ and the result rearranged to give

$$f_i^{(1)} = 2\vec{V}/v_{ti}^2 \cdot (\eta_{ii}^s \vec{V}_i/(\eta_i^s\{\eta_{ii}^s/\eta_i^s\}) + [\vec{V}_B(V)/\eta_i^s - \eta_{ii}^s\{\vec{V}_B(V)/\eta_i^s\}/(\eta_i^s\{\eta_{ii}^s/\eta_i^s\})])f_{i0} \tag{B-27}$$

where $f_i^{(1)} = \vec{V}\cdot\vec{F}_i^{(1)}/V$ is the $\ell = 1$ harmonic component of the beam ion distribution function, the integral operator $\{\quad\}$ is defined such that

$$\{A(V)\} = 8/(3\sqrt{\pi})\int_0^\infty x_a^4 A(x_a v_{ta}) e^{-x_a^2}\, dx_a \tag{B-28}$$

and v_i is the ion flow which arises from the plasma field response to the ion collisional effects. However to the lowest order approximation

$$(\eta_{ii}^s\{V_B(V)/\eta_i^s\} - \eta_{ii}^s V_i)/(V_B(V)\{\eta_{ii}^s/\eta_i^s\}) << 1 \tag{B-29}$$

and therefore

$$f_i^{(1)} \cong 2\vec{V}\cdot\vec{V}_B(V)/(\eta_i^s v_{ti}^2)\cdot \tag{B-30}$$

Finally, to a good approximation

$$\eta_i^s \cong (n_i\Gamma_{ii} + n_Z\Gamma_{iZ})/V^3 \tag{B-31}$$

therefore the total ion particle distribution function can be expressed as follows:

$$f_i = f_{i0} + f_i^{(1)} = [1 + 2(1 + m_B/m_i)n_B\Gamma_{iB}\cos\zeta/(n\Gamma_i))(E_i/E_{ti})$$

$$(E_i/\bar{E}_B)]f_{i0} \tag{B-32}$$

where

$$n\Gamma_i = \sum_j n_j\Gamma_{ij} \qquad \text{for } j = i,Z \quad . \tag{B-33}$$

In essense, eq,(B-32) clearly indicates that an asymmetric shift of the equilibrium thermal ion distribution function has resulted from the average collisional force exerted on the ions by the injected beam ions, the magntiude of which is dependent on the the angle of injection and the ratio of the mean ion energy to the mean beam ion energy. A numerical evaluation of the analytical solution has been preformed [125] and the results of this evaluation was then compared to the experimental data where it was shown to be in excellent agreement [125].

APPENDIX C

VALIDITY OF LIOUVILLE'S THEOREM FOR THE KINETIC EQUATION GOVERNING THE LOWEST ORDER GYROTROPIC COMPONENT OF THE PARTICLE DISTRIBUTION FUNCTION FOR A STRONGLY ROTATING BEAM INJECTED PLASMA

In this appendix it is shown that the collisionless version of eq.(2.2-36) satisfies Liouville's theorem for the phase space basis $\{\vec{R}_{gc},\vec{V}_{gc},V_{\parallel},t\}$. To this end it suffices to prove that

$$\partial(\hat{n}_{\parallel}\cdot\vec{B}^*)/\partial t + \vec{\nabla}\cdot[(\hat{n}_{\parallel}\cdot\vec{B}^*)\vec{V}_{gc}] + \hat{V}_{\parallel}\cdot\vec{\nabla}_V(\hat{n}_{\parallel}\hat{n}_{\parallel}:\vec{B}^* d\vec{V}_{gc}/dt) = 0 \quad \text{(C-1)}$$

Combining eqs.(2.2-34),(2.2-35), the modified Maxwell equations

$$\vec{\nabla}\cdot\vec{B}^* = 0 \quad \text{(C-2)}$$

and

$$\partial\vec{B}^*/\partial t + \vec{\nabla}\times\vec{E}^* = \partial\vec{B}^*/\partial t + \vec{\nabla}\times\vec{E}^{A*} = 0 \quad \text{(C-3)}$$

and the definitions for the modified field vectors $\vec{B}^*$ and $\vec{E}^*$ with eq.(C-1) gives the desired identity relationship

$$\vec{B}^*\cdot\partial\hat{n}_{\parallel}/\partial t + \hat{n}_{\parallel}\cdot\partial\vec{B}^*/\partial t + \hat{n}_{\parallel}\cdot(\vec{\nabla}\times\vec{E}^{A*}) - \vec{E}^{A*}\cdot(\vec{\nabla}\times\hat{n}_{\parallel}) + \vec{\nabla}H\cdot(\vec{\nabla}\times\hat{n}_{\parallel})$$

$$/e_a + (e_a/m_a)\hat{V}_{\parallel}\cdot\vec{\nabla}_V[\vec{B}^*\cdot(\vec{E}^{A*} - \vec{\nabla}H/e_a)] = (e_a/m_a)[\vec{B}^*\hat{V}_{\parallel}:(\vec{\nabla}_V\vec{E}^{A*} +$$

$$(m_a/e_a)\hat{n}_{\parallel}\partial\hat{n}_{\parallel}/\partial t) + (\vec{E}^{A*} - \vec{\nabla}H/e_a)\cdot(\hat{V}_{\parallel}\cdot\vec{\nabla}_V\vec{B}^* - (m_a/e_a)\vec{\nabla}\times\hat{n}_{\parallel})] = 0$$

(C-4)

APPENDIX D

RECURSIVE DERIVATION OF THE $O(\delta^1)$ DRIFT KINETIC EQUATION FOR A STRONGLY ROTATING BEAM INJECTED PLASMA

In this appendix, a derivation of the $O(\delta^1)$ drift kinetic equation is carried out for a strongly rotating beam injected plasma. The starting point of this derivation is the fundamental assumption that for a strongly magnetized plasma ($\delta << 1$) the particle distribution function can be decomposed into gyroangle dependent and gyrotropic components, the magnitudes of which are ordered such that $\tilde{f}_a \sim O(\delta^1)\hat{f}_a$. In view of this ordered decomposition of the particle distribution function, the Vlasov Fokker-Planck equation can be expressed as a set of coupled equations

$$\Omega_a \partial f_a/\partial\zeta = D_\zeta[I(f_a) - (C(f_a) + S(f_a))] - [I(f_a) - (C(f_a) + S(f_a))] \tag{D-1}$$

and

$$D_\zeta[I(f_a) - (C(f_a) + S(f_a))] = 0 \tag{D-2}$$

where the differential operators $D_\zeta[X(\zeta)]$ and $I(f_a)$ are defined such that

$$D_\zeta[X(\zeta)] = 1/2\pi\int_0^{2\pi} X(\zeta)d\zeta \tag{D-3}$$

and

$$I(f_a) = df_a/dt - \Omega_a \partial/\partial\zeta \tag{D-4}$$

respectively.

To construct the desired drift kinetic equation the particle distribution function can be expanded in powers of δ and used in eqs.(D-1) and (D-2) which are then solved by the method of succesive approximations. In particular since $\tilde{f}_a \sim O(\delta^1)\hat{f}_a$, then the first step in the computation is to set f_a equal to $\hat{f}_a$ in eq.(D-1) and solve the resulting expression for $\tilde{f}_a$. To facilitate the ensuing analysis the energy coordinate basis $\{\vec{r},\mu,H,\zeta\}$ will be used where

$$d\mu/dt = -\mu/B(\partial B/\partial t + 2V_\parallel B\vec{V}_\perp\cdot(\partial\hat{n}_\parallel/\partial t)/V_\perp^2) - \mu\vec{V}\cdot(\vec{\nabla}B + 2V_\parallel B(\vec{\nabla}\hat{n}_\parallel)\cdot\vec{V}_\perp/V_\perp^2)/B + e_a\vec{V}_\perp\cdot\hat{\vec{E}}/(m_aB) - 2(\hat{e}_\phi\cdot\vec{u}_{aE})\vec{V}_\perp\cdot(\hat{e}_z\times\vec{V}_\parallel)/B \tag{D-5}$$

and

$$dH/dt = e_a/m_a[\vec{V}\cdot\hat{\vec{E}} + (\partial\hat{\Phi}/\partial t + \vec{V}\cdot\vec{\nabla}\hat{\Phi})] \tag{D-6}$$

with

$$\hat{\vec{E}} = \vec{E} + m_a/e_a(\hat{e}_\phi \cdot \vec{u}_{aE})^2 \vec{R} \tag{D-7}$$

and

$$\hat{\Phi} = \Phi - m_a/e_a(u_{aE}^2/2) \tag{D-8}$$

being the effective electric field vector and effective electrostatic potential respectively. Using eqs.(D-3) through (D-8) in conjunction with eq.(D-1) for $f_a = \hat{f}_a$ yields

$$\begin{aligned}\partial\tilde{f}_a/\partial\zeta = {} & -(\vec{V}_\perp \cdot \vec{\nabla}\hat{f}_a)/\Omega_a + [(2[\vec{V}_\parallel \vec{V}_\perp]_2 + \vec{V}_\perp \vec{u}_{aE} + \vec{V}_\perp \vec{V}_\perp - V_\perp^2/2 \\ & (\overleftrightarrow{I} - \hat{n}_\parallel \hat{n}_\parallel)) : \vec{\nabla}\vec{u}_{aE} - e_a \vec{V}_\perp \cdot (\hat{\vec{E}} + \vec{\nabla}\hat{\Phi})/m_a]/\Omega_a(\partial\hat{f}_a/\partial H) + [\mu\vec{V}\cdot\vec{\nabla}B/B \\ & + V_\parallel \vec{V}_\perp \cdot (\partial\hat{n}_\parallel/\partial t + \vec{V}\cdot\vec{\nabla}\hat{n}_\parallel)/B - e_a \vec{V}_\perp \cdot \hat{\vec{E}}/(m_a B) + 2(\hat{e}_\phi \cdot \vec{u}_{aE})\vec{V}_\perp \cdot (\hat{e}_z \\ & \times \vec{V}_\parallel)/B + (\vec{V}_\perp(\vec{V} + \vec{u}_{aE})/B - \mu(\overleftrightarrow{I} - \hat{n}_\parallel \hat{n}_\parallel)) : \vec{\nabla}\vec{u}_{aE}]/\Omega_a(\partial\hat{f}_a/\partial\mu))\end{aligned} \tag{D-9}$$

where in obtaining the above expressions use has been made of the gyroaveraged expressions

$$D_\zeta[d\mu/dt] = -\mu\partial \ln B/\partial t \tag{D-10}$$

and

$$D_\zeta[dH/dt] = e_a/m_a[\vec{V}_\parallel \cdot \hat{\vec{E}} + (\partial\hat{\Phi}/\partial t + \vec{V}_\parallel \cdot \vec{\nabla}\hat{\Phi})] \tag{D-11}$$

and the term $D\,[C(f_a) + S(f_a)] - (C(f_a) + S(f_a))$ has been neglected since this term is $\geq O(\delta^2)$. Equation (D-9) can be solved directly by integration with the result

$$\tilde{f}_a = (\vec{V}_\perp \times \hat{n}_\parallel/\Omega_a)\cdot[\vec{\nabla}\hat{f}_a - [\Omega_a(\hat{n}_\parallel \times \vec{V}_{dr}) - (\vec{V}_\parallel + \vec{u}_{aE})\cdot\vec{\nabla}\vec{u}_{aE}]/B$$
$$\partial\hat{f}_a/\partial\mu - [\vec{u}_{aE}\cdot\vec{\nabla}\vec{u}_{aE} - e_a(\hat{\vec{E}} + \vec{\nabla}\hat{\Phi})/m_a]\partial\hat{f}_a/\partial H] - 2[(\vec{V}_\perp \times \hat{n}_\parallel/\Omega_a)$$
$$\vec{V}_\parallel]_2 : \vec{\nabla}\vec{u}_{aE}\partial\hat{f}_a/\partial H - \mu/\Omega_a(\hat{V}_\perp \times \vec{B})\hat{V}_\perp : \vec{\nabla}\vec{u}_{aE}\partial\hat{f}_a/\partial H - \mu/\Omega_a(\hat{V}_\perp \times \hat{n}_\parallel)$$
$$\hat{V}_\perp : \vec{\nabla}\vec{u}_{aE}\partial\hat{f}_a/\partial\mu - V_\parallel\mu/\Omega_a[(\hat{V}_\perp \times \hat{n}_\parallel)\hat{V}_\perp : \vec{\nabla}\hat{n}_\parallel - \hat{n}_\parallel\cdot(\vec{\nabla} \times \hat{n}_\parallel)/2]\partial\hat{f}_a/\partial\mu \tag{D-12}$$

where

$$\vec{V}_{dr} = \hat{n}_\parallel \times [\mu\vec{\nabla}B + V_\parallel(\partial\hat{n}_\parallel/\partial t + \vec{V}_\parallel\cdot\vec{\nabla}\hat{n}_\parallel) - (\hat{e}_\phi\cdot\vec{u}_{aE})^2\vec{R} +$$
$$(\hat{e}_\phi\cdot\vec{u}_{aE})(\hat{e}_z \times \vec{V}_\parallel)]/\Omega_a + \vec{E} \times \vec{B}/B^2 \tag{D-13}$$

is the particle's radial drift velocity as seen by an observer in the coordinate frame moving with the plasma.

To obtain a drift kinetic equation which is first order in δ, only the lowest order distribution function needs to be used in eq.(D-12) in the determination of $\tilde{f}_a$. In this regard setting $\hat{f}_a = F_a$ in eq.(D-12) gives

$$\tilde{f}_a = (\vec{V}_\perp \times \hat{n}_\parallel/\Omega_a)\cdot[\vec{\nabla}\ln F_a + 2/v_{ta}^2[(R\vec{u}_E^{(0)}\cdot\hat{n}_\phi)\partial(R^{-1}\vec{u}_E^{(0)}\cdot\hat{n}_\phi)/\partial\psi\,\hat{e}_\psi$$
$$]]F_a + 4/v_{ta}^2[(\vec{V}_\perp \times \hat{n}_\parallel/\Omega_a)\vec{V}_\parallel : \vec{\nabla}\vec{u}_{aE}]_2 F_a + (\text{higher order terms in } \delta) \tag{D-14}$$

where the higher order terms

$$2/v_{ta}^2(\vec{V}_\perp \times \hat{n}_\parallel/\Omega_a)\cdot(e_a/m_a\partial\vec{A}/\partial t)F_a > O(\delta^1) \tag{D-15}$$

and

$$(2\mu/(\Omega_a v_{ta}^2)(\hat{V}_\perp \times \vec{B})\hat{V}_\perp:\vec{\nabla}\vec{u}_{aE})F_a > O(\delta^1) \tag{D-16}$$

have been neglected in formulating eq.(D-14). Noting that

$$(\hat{n}_\psi/|\hat{e}_\psi|)\cdot\vec{\nabla}\Big|_H F_a = \partial \ln N_a(\psi)/\partial\psi + (2H/v_{ta}^2 - 3/2)\partial \ln T_a/\partial\psi =$$

$$\partial \ln p_a/\partial\psi + e_a/T_a\partial\Phi_0/\partial\psi - m_a/T_a\partial(u_E^{(0)^2}/2)/\partial\psi + [(V/v_{ta})^2 -$$

$$5/2]\partial \ln T_a/\partial\psi = (\hat{n}_\psi/|\hat{e}_\psi|)\cdot\vec{\nabla}\Big|_V F_a + e_a/T_a\partial\Phi_0/\partial\psi - 2/v_{ta}^2$$

$$\partial(u_E^{(0)^2}/2)/\partial\psi \tag{D-17}$$

then in the velocity basis $\{V_+, V_\parallel\}$, eq.(D-14) becomes

$$\tilde{f}_a = (\vec{V}_\perp \times \hat{n}_\parallel/\Omega_a)\cdot[\vec{\nabla}\ln F_a + 2/v_{ta}^2[e_a/m_a\vec{\nabla}\Phi_0 - (\vec{\nabla}u_E^{(0)^2}/2 -$$

$$(R\vec{u}_E^{(0)}\cdot\hat{n}_\phi)\partial(R^{-1}\vec{u}_E^{(0)}\cdot\hat{n}_\phi)/\partial\psi\,\hat{e}_\psi)]]F_a + 4/v_{ta}^2[(\vec{V}_\perp \times \hat{n}_\parallel/\Omega_a)$$

$$\vec{V}_\parallel:\vec{\nabla}\vec{u}_{aE}]_2 F_a + (\text{higher order terms in } \delta) \tag{D-18}$$

which is in agreement with eq.(2.2-49) of chapter II.

The $O(\delta^1)$ drift kinetic equation can now be obtained from eq.(D-2) by noting that $f_a = F_a + (\hat{f}_{a1} + \tilde{f}_a)$ with $\tilde{f}_a$ being given by eq.(D-14). In this spirit, to the first order

$$D_\zeta[I(f_a)] = \partial\hat{f}_{a1}/\partial t + \vec{V}_\parallel\cdot\vec{\nabla}\hat{f}_{a1} + \vec{V}_\parallel\cdot(e_a/m_a\vec{\nabla}\Phi_1 + \partial\vec{u}_E^{(0)}/\partial t)$$
$$\partial F_a/\partial H + O(\delta^2) \tag{D-19}$$

and therefore

$$\partial\hat{f}_{a1}/\partial t + \vec{V}_\parallel\cdot\vec{\nabla}\hat{f}_{a1} + \vec{V}_\parallel\cdot(e_a/m_a\vec{\nabla}\Phi_1 + \partial\vec{u}_E^{(0)}/\partial t)\partial F_a/\partial H = C(\hat{f}_{a1})$$
$$S(\hat{f}_{a1}) - D_\zeta[I(\tilde{f}_a)] \tag{D-20}$$

where here the terms proportional to $\partial\hat{f}_{a1}/\partial\mu$, $\partial\hat{f}_{a1}/\partial H$, $C(\tilde{f}_a)$ and $S(\tilde{f}_a)$ have been neglected in formulating the above expression since they are $\geq O(\delta^2)$. Likewise, retaining only the $O(\delta^1)$ terms in eq.(D-14) gives

$$\tilde{f}_a = (\vec{V}_\perp \times \hat{n}_\parallel/\Omega_a)\cdot\vec{h}_a \tag{D-21}$$

where

$$\vec{h}_a = [\vec{\nabla}\ln F_a + 2/v_{ta}^2[(R\vec{u}_E^{(0)}\cdot\hat{n}_\phi)\partial(R^{-1}\vec{u}_E^{(0)}\cdot\hat{n}_\phi)/\partial\psi\,\hat{e}_\psi]F_a \ . \tag{D-22}$$

In view of eq.(D-22) it follows that

$$D_\zeta[I(\tilde{f}_a)] = D_\zeta[d(\vec{V}_\perp \times \hat{n}_\parallel/\Omega_a)/dt]\cdot\vec{h}_a + D_\zeta[(\vec{V}_\perp \times \hat{n}_\parallel/\Omega_a)\vec{V}_\perp]:\vec{\nabla}\vec{h}_a$$

$$+ D_\zeta[(\vec{V}_\perp \times \hat{n}_\parallel/\Omega_a)dH/dt]\cdot\partial\vec{h}_a/\partial H = \vec{V}_{dr}\cdot\vec{h}_a + O(\delta^1) \tag{D-23}$$

or

$$D_\zeta[I(\tilde{f}_a)] = (\vec{V}_{dr}\cdot\hat{e}_\psi)[\partial \ln F_a/\partial\psi + 2/v_{ta}^2(I\hat{n}_\parallel\cdot[\vec{V} + \vec{u}_E^{(0)}]/B)$$

$$\partial(R^{-1}\vec{u}_E^{(0)}\cdot\hat{n}_\phi)/\partial\psi]F_a \tag{D-24}$$

where

$$\vec{V}_{dr}\cdot\hat{e}_\psi \cong 2\pi\vec{V}_\parallel/\gamma'\cdot\vec{\nabla}[I\hat{n}_\parallel\cdot(\vec{V} + \vec{u}_E^{(0)})/\Omega_a] \quad . \tag{D-25}$$

It should be noted that in obtaining the above expression it has been assumed that $(B_\chi/B_\phi)^2 << 1$ and therefore $(I/B)^2 \sim R^2$. Finally combining eqs.(D-25) with (D-21) yields the desired result, namely

$$\partial\hat{f}_{a1}/\partial t + \vec{V}_\parallel\cdot\vec{\nabla}\hat{f}_{a1} + \vec{V}_{dr}\cdot[\vec{\nabla}\ln F_a + 2/v_{ta}^2(I\hat{n}_\parallel\cdot[\vec{V} + \vec{u}_E^{(0)}]/B)$$

$$\partial(R^{-1}\vec{u}_E^{(0)}\cdot\hat{n}_\phi)/\partial\psi\,\hat{e}_\phi]F_a + \vec{V}_\parallel\cdot(e_a\vec{\nabla}\Phi_1/m_a + \partial\vec{u}_E^{(0)}/\partial t)\partial F_a/\partial H =$$

$$C(\hat{f}_{a1}) + S(\hat{f}_{a1}) \tag{D-26}$$

In adherence to the multiple time analysis carried out in the text of this thesis, the lowest order $O(\delta^1)$ version of eq.(D-27) becomes

$$\vec{V}_{\parallel}\cdot\vec{\nabla}\hat{f}_{a1} + \vec{V}_{dr}\cdot[\vec{\nabla}\ln F_a + 2/v_{ta}^2(I\hat{n}_{\parallel}\cdot[\vec{V} + \vec{u}_E^{(0)}]/B)\partial(R^{-1}\vec{u}_E^{(0)}\cdot\hat{n}_{\phi})$$

$$/\partial\psi\,\hat{e}_{\psi}]F_a - (e_a\vec{V}_{\parallel}\cdot\vec{\nabla}\Phi_1)F_a/T_a = \sum_b(C_{ab}(\hat{f}_{a1},\hat{f}_{b1}) + S_{aB}(F_a,f_B)) \tag{D-27}$$

where in obtaining the above expression it has been noted that $\partial f_{a1}/\partial t_1 > O(\delta^1)$ and there is no new physics to be gained in the terms $\partial F_a/\partial t_1$ and $\partial\vec{u}_E^{(0)}/\partial t_1$.

APPENDIX E

THE TEST PARTICLE COMPONENT OF THE FOKKER-PLANCK COLLISION OPERATOR

In this appendix, the functional structure of the test particle component of the Fokker-Planck collision operator is obtained. In this regard the first and second Rosenbluth potentials must be evaluated for a Maxwellian distribution function. To facilitate the ensuing analysis, a spherical coordinate system like that shown in figure E-1 will be used. Commencing with the first Rosenbluth potential it follows that

$$h_{ab} = n_b m_a/(\pi^{3/2} v_{tb}^3 m_{ab}) \int_{\vec{v}'} e^{-(v'/v_{tb})^2} d^3v'/|\vec{v} - \vec{v}'| = 2\pi n_b m_a$$

$$/(\pi^{3/2} v_{tb}^3 m_{ab}) \int_0^\infty [\int_0^\pi e^{-2vV\cos\theta/v_{tb}^2} \sin\theta d\theta] e^{-(v^2+V^2)/v_{tb}^2} VdV =$$

$$n_b m_a/(\pi^{1/2} v v_{tb} m_{ab}) \int_0^\infty [e^{-(v^2+V^2-2vV)/v_{tb}^2} - e^{(v^2+V^2+2vV)/v_{tb}^2}]$$

$$dV = n_b m_a/(\pi^{1/2} v v_{tb} m_{ab}) \int_0^\infty [e^{-(V-v)^2/v_{tb}^2} - e^{-(V+v)^2/v_{tb}^2}] dV \ . \tag{E-1}$$

Now letting

$$x = (V - v)/v_{tb} \quad \text{and} \quad y = (V + v)/v_{tb} \tag{E-2}$$

then eq.(E-1) becomes

$$h_{ab} = n_b m_a/(\pi^{1/2} v m_{ab})[\int_{-v/v_{tb}}^{\infty} e^{-x^2}dx - \int_{v/v_{tb}}^{\infty} e^{-y^2}dy] = n_b m_a$$

$$/(\pi^{1/2} v m_{ab})\int_{-v/v_{tb}}^{v/v_{tb}} e^{-x^2}dx = 2n_b m_a/(\pi^{1/2} v m_{ab})\int^{v/v_{tb}} e^{-x^2}dx =$$

$$n_b m_a/(v m_{ab})[\phi(v/v_{tb})] \tag{E-3}$$

or

$$\phi(v/v_{tb}) = 2/\sqrt{\pi}\int_0^{v/v_{tb}} e^{-x^2}dx \tag{E-4}$$

where here the error function $\phi(v/v_{tb})$ is defined such that [94,98]

$$h_{ab} = n_b m_a \phi(v/v_{tb})/(m_{ab} v) \ .$$

The second Rosenbluth potential can be evaluated in a similiar manner. In particular, one can make the same variable change as that used in the calculation of h_{ab} to give

$$g_{ab} = n_b/(\pi^{3/2} v_{tb}^3)\int_{\vec{v}'}|\vec{v} - \vec{v}'|e^{-(v'/v_{tb})^2}d^3v' = 2n_b/(\pi^{1/2} v_{tb}^3)$$

$$\int_0^{\infty}[\int_0^{\pi} e^{-(2vV\cos\theta)/v_{tb}^2}\sin\theta d\theta]e^{-(v^2+V^2)/v_{tb}^2} V^3 dV = n_b/(\pi^{1/2} v$$

$$v_{tb})\int_0^{\infty}[e^{-(v^2+V^2-2vV)/v_{tb}^2} - e^{-(v^2+V^2+2vV)/v_{tb}^2}]V^2 dV = n_b v_{tb}^2$$

$$/(\pi^{1/2} v)[\int_{-v/v_{tb}}^{\infty}(x + v/v_{tb})^2 e^{-x^2}dx - \int_{v/v_{tb}}^{\infty}(y - v/v_{tb})^2 e^{-y^2}$$

$$dy] \ . \tag{E-5}$$

Upon expanding the integrand and rearranging the result yields

$$g_{ab} = n_b v_{tb}^2/(\pi^{1/2}v)[\int_{-v/v_{tb}}^{v/v_{tb}} x^2 e^{-x^2}dx + (v/v_{tb})^2\int_{-v/v_{tb}}^{v/v_{tb}} e^{-x^2}dx]$$

$$= 2n_b v_{tb}^2/(\pi^{1/2}v)[\int_0^{v/v_{tb}} x^2 e^{-x^2}dx + (v/v_{tb})\int_0^{v/v_{tb}} e^{-x^2}dx] =$$

$$2n_b v_{tb}/(\pi^{1/2}v)[(v/v_{tb})^2\int_0^{v/v_{tb}} e^{-x^2}dx - xe^{-x^2}/2\Big|_0^{v/v_{tb}} + 1/2$$

$$\int_0^{v/v_{tb}} e^{-x^2}dx]$$

or

$$g_{ab} = n_b v_{tb}^2/(2v)[(1 + 2(v/v_{tb})^2)\phi(v/v_{tb}) - ve^{-(v/v_{tb})^2}/(\pi^{1/2}v_{tb})] \quad . \tag{E-6}$$

With the functional structure of the Rosenbluth potentials formally established, the dynamic friction and velocity diffusion terms characterizing the test particle component of the collision operator can be obtained. In this spirit, combining eq.(E-4) with (2.3-7) gives

$$\vec{F}_{ab} = m_a\Gamma_{ab}\vec{\nabla}_v h_{ab} = n_b m_a^2\Gamma_{ab}\hat{v}/m_{ab}[\phi'(v/v_{tb})/((v/v_{tb})v_{tb}^2) - \phi(v/v_{tb})/v^2] = -2n_b m_a^2\Gamma_{ab}/(m_{ab}v_{tb}^2)[\phi(v/v_{tb}) - (v/v_{tb})\phi'(v/v_{tb})]\hat{v}/(2(v/v_{tb})^2$$

or

$$\vec{F}_{ab} = -2n_b m_a^2 \Gamma_{ab} \xi(v/v_{tb}) \hat{v}/(m_{ab} v_{tb}^2) \tag{E-7}$$

where $\xi(v/v_{tb})$ is the Chandrasekhar function which is defined such that [94,98]

$$\xi(v/v_{tb}) = [\phi(v/v_{tb}) - (v/v_{tb})\phi'(v/v_{tb})]/(2(v/v_{tb})^2) \quad . \tag{E-8}$$

Defining the characteristic frequency η_{ab}^s which characterizes the slowing down rate of the test particle due to dynamical friction with the field particles such that [89]

$$\eta_{ab}^s = 2n_b m_a \Gamma_{ab} \xi(v/v_{tb})/(m_{ab} v_{tb}^2 v_{ta}(v/v_{ta})) \tag{E-9}$$

then eq.(E-7) assumes the physical form

$$\vec{F}_{ab} = -\eta_{ab}^s (m_a \vec{v}) \quad . \tag{E-10}$$

In a similiar manner, the diffusion tensor can be calculated from eq.(E-6) and (2.3-8) as follows:

$$\overleftrightarrow{D}_{ab} = \Gamma_{ab} \vec{\nabla}_v \vec{\nabla}_v g_{ab} = n_b \Gamma_{ab} v_{tb}^2 \vec{\nabla}_v \vec{\nabla}_v [\phi(v/v_{tb})/v[1 + 2(v/v_{tb})^2] - (v/v_{tb}) e^{-(v/v_{tb})^2}/(v\pi^{1/2})] \quad . \tag{E-11}$$

Carrying out the indicated differentiation yields

$$\overleftrightarrow{D}_{ab} = n_b\Gamma_{ab}/v_{tb}[(\vec{z}\vec{z}/z^2\partial^2/\partial z^2 + [\overleftrightarrow{I}z^2 - \vec{z}\vec{z}]/z^3\partial/\partial z)([z + 1/(2z)]\phi(z) - e^{-z^2}/\pi^{1/2})] = n_b\Gamma_{ab}/v_{tb}[\vec{z}\vec{z}/z^2(\phi(z)/z^3 + 2[1 - 1/(2z^2)]\phi'(z) + [z + 1/(2z)]\phi''(z) - 2e^{-z^2}/\pi^{1/2} + 4z^2e^{-z^2}/\pi^{1/2}) + (\overleftrightarrow{I}z^2 - \vec{z}\vec{z})/z^4([z + 1/(2z)]\phi(z) + [z^2 + 1/2]\phi'(z) - 2z^2e^{-z^2}/\pi^{1/2})] \tag{E-12}$$

where here

$$\vec{\nabla}_v\vec{\nabla}_v \rightarrow \vec{\nabla}_z\vec{\nabla}_z = 1/v_{tb}^2[(\vec{z}\vec{z}/z^2)\partial^2/\partial z^2 + ((\hat{\theta}\hat{\theta} + \hat{\phi}\hat{\phi})/z^2)z\partial/\partial z] \tag{E-13}$$

and

$$(\hat{\theta}\hat{\theta} + \hat{\phi}\hat{\phi}) = \overleftrightarrow{I} - \hat{v}\hat{v} = (\overleftrightarrow{I}z^2 - \vec{z}\vec{z})/z^2 \quad . \tag{E-14}$$

Noting that

$$\phi''(z) = -4ze^{-z^2}/\pi^{1/2} \tag{E-15}$$

$$\phi'(z) = 2e^{-z^2}/\pi^{1/2} \tag{E-16}$$

$$\phi''(z)/(2z) = -2e^{-z^2}/\pi^{1/2} = -\phi'(z) \tag{E-17}$$

then eq.(E-11) becomes

$$\overleftrightarrow{D}_{ab} = n_b\Gamma_{ab}/v_{tb}[\vec{z}\vec{z}/z^2((\phi(z) - z\phi'(z))/z^3 + (\overleftrightarrow{I}z^2 - \vec{z}\vec{z})/z^4$$

$$(z\phi(z) - [(\phi(z) - z\phi'(z))/(2z)])] = n_b\Gamma_{ab}/v_{tb}[2\vec{z}\vec{z}\xi(z)/z^3$$

$$+ (\overleftrightarrow{I}z^2 - \vec{z}\vec{z})/z^2(\phi(z) - \xi(z))]$$

or

$$\overleftrightarrow{D}_{ab} = n_b\Gamma_{ab}/v[2\vec{v}\vec{v}\xi(v/v_{tb})/v^2 + (\overleftrightarrow{I}v^2 - \vec{v}\vec{v})/v^2(\phi(v/v_{tb}) -$$

$$\xi(v/v_{tb}))] \quad . \tag{E-18}$$

For an isotropic distribution function such as a Maxwellian the diffusion tensor is diagonal i.e.,

$$\overleftrightarrow{D}_{ab} = \begin{pmatrix} D^{\parallel}_{ab} & 0 & 0 \\ 0 & D^{\perp}_{ab} & 0 \\ 0 & 0 & D^{\perp}_{ab} \end{pmatrix} \tag{E-19}$$

where

$$D^{\parallel}_{ab} = 2n_b\Gamma_{ab}\xi(v/v_{tb})/v \tag{E-20}$$

and

$$D_{ab}^{\perp} = n_b \Gamma_{ab}/v[\phi'(v/v_{tb}) - \xi(v/v_{tb})] \quad . \tag{E-21}$$

Defining the characteristic frequencies $\eta_{ab}^{\parallel}$ and $\eta_{ab}^{\perp}$ for the parallel velocity diffusion and pitch angle deflection rates respectively such that [89]

$$\eta_{ab}^{\parallel} = D_{ab}^{\parallel}/v^2 = 2n_b \Gamma_{ab} \xi(v/v_{tb})/v^3 \tag{E-22}$$

and

$$\eta_{ab}^{\perp} = D_{ab}^{\perp}/v^2 = n_b \Gamma_{ab}[\phi(v/v_{tb}) - \xi(v/v_{tb})]/v^3 \tag{E-23}$$

then

$$\overleftrightarrow{D}_{ab} = \eta_{ab}^{\parallel} \vec{v}\vec{v} + \eta_{ab}^{\perp}(\overleftrightarrow{I}v^2 - \vec{v}\vec{v}) . \tag{E-24}$$

Finally, using eqs.(E-10) and (E-24) in eq.(2.3-5) and (2.3-6) yields the desired result for the test particle component of the collision operator, namely

$$C_{ab}(f_{a1}, f_{b0}) = \eta_{ab}^{\perp} L f_{a1} + \vec{v}/v^3 \cdot \vec{\nabla}_v (I_{ab} f_{a1}) \tag{E-25}$$

where

$$L = (\vec{v} \times \vec{\nabla}) \cdot (\vec{v} \times \vec{\nabla})/2 = 1/(2\sin\theta)\partial/\partial\theta[\sin\theta\partial/\partial\theta] + 1/(2\sin^2\theta)\partial^2/\partial\phi^2 \tag{E-26}$$

is the pitch angle operator and

$$I_{ab} = v^3 m_{ab}/m_b(\eta^s_{ab} + m_b \eta''_{ab} \vec{v} \cdot \vec{\nabla}_v/(2m_{ab})) \quad . \tag{E-27}$$

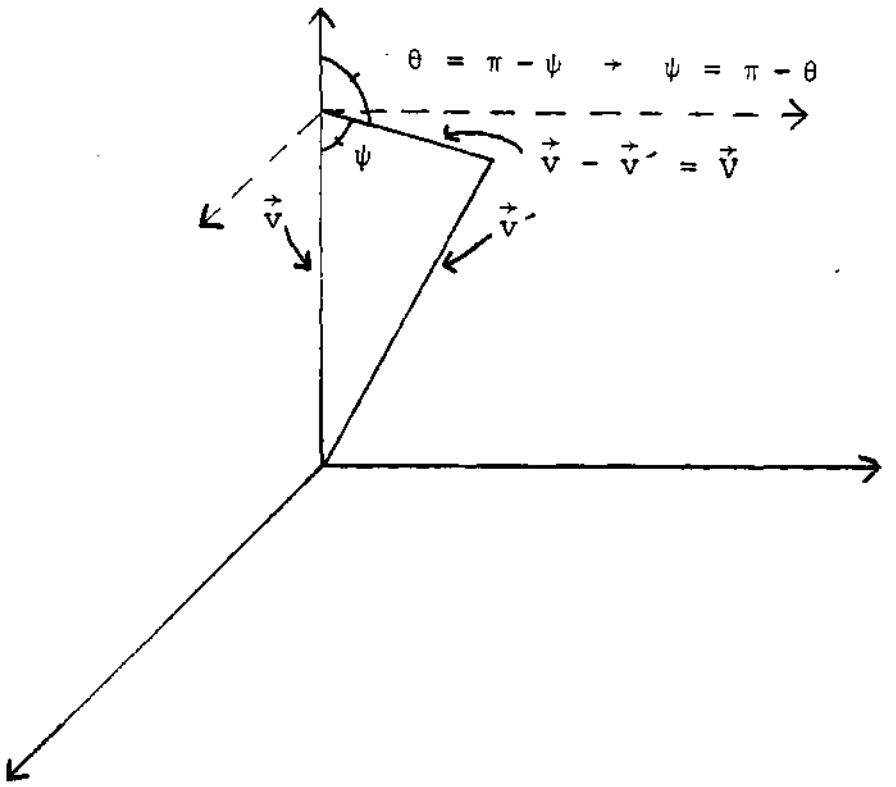

$$v^{2\prime} = v^2 + V^2 - 2vV\cos\psi = v^2 + V^2 + 2vV\cos\theta$$

FIGURE (E-1)

VELOCITY SPACE COORDINATE SYSTEM FOR THE TEST PARTICLE COMPONENT OF THE COLLISION OPERATOR

APPENDIX F

THE FIELD RESPONSE COMPONENT OF THE FOKKER-PLANCK COLLISION OPERATOR

In this appendix, the linearized field response component of the Fokker-Planck collision operator is calculated. To accomplish this task, the Rosenbluth potentials functions can be expanded in terms of spherical harmonics. Commencing with the first Rosenbluth potential then [88]:

$$h_{ab} = \sum_{\ell}(m_a/m_{ab})\int_{\vec{v}'} f_{b1}(v')v_<^{\ell}P_{\ell}(z)d^3v'/v_>^{(\ell-1)} = \sum_{\ell}(m_a/m_{ab})$$

$$[\int_0^v f_{b1}(v')v'^{(\ell+2)}dv'/v^{(\ell+1)} + \int_v^{\infty} f_{b1}(v')v^{\ell}dv'/v'^{(\ell-1)}]$$

$$[\int_{\phi'=0}^{2\pi}\int_{\theta'=0}^{\pi} \sin\theta' P_{\ell}(z)d\theta' d\phi'] \tag{F-1}$$

where z is equal to the cosine of the angle between the test and field particle vectors (see figure F-1) and $v_>$ is the greater and $v_<$ is the lesser of v and v'. Likewise the field particle distribution function can be expanded in a spherical harmonic series of the form:

$$f_{b1}(v') = \sum_{\ell}\sum\sum A_{b1mn}^{(\ell)} Y_{mn}^{(\ell)}(\theta',\phi')f_{b0} = \sum_{\ell}\overleftrightarrow{A}_{b1}^{(\ell)} \cdot \underset{\ell}{\vec{v}}^{(\ell)} f_{b0}/v^{(\ell)} \quad . \tag{F-2}$$

Combining eq.(F-2) with (F-1) and employing the integral identity

$$\int_{\phi'=0}^{\pi}\int_{\theta'=0}^{\pi} \sin\theta' Y_{mn}^{(s)}(\theta',\phi') P_{\ell}(z) d\theta' d\phi' = 4\pi Y_{mn}^{(\ell)}(\theta,\phi)\delta_{s,\ell}/(2\ell + 1) \tag{F-3}$$

gives

$$h_{ab} = \sum_{\ell}\sum\sum 4\pi m_a/(m_{ab} v(2\ell+1))[1/v^{\ell}\int_0^v A_{b1mn}^{(\ell)} f_{b0}\ Y_{mn}^{(\ell)}(\theta,\phi) v'^{(\ell+2)} dv'$$
$$+ v^{(\ell+1)}\int_v^{\infty} A_{b1mn}^{(\ell)} f_{b0}\ Y_{mn}^{(\ell)}(\theta,\phi) v'^{(1-\ell)} dv'] \tag{F-4}$$

or

$$h_{ab} = \sum_{\ell} 4\pi m_a/(m_{ab} v(2\ell+1)[1/v^{\ell}\int_0^v [\overleftrightarrow{A}_{b1}^{(\ell)} \cdot \vec{v}_{\ell}^{(\ell)} v'^{(\ell+2)} f_{b0} dv'/v^{(\ell)}]$$
$$+ v^{(\ell+1)}\int_v^{\infty} [\overleftrightarrow{A}_{b1}^{(\ell)} \cdot \vec{v}_{\ell}^{(\ell)} v'^{(1-\ell)} f_{b0} dv'/v^{(\ell)}]] \ . \tag{F-5}$$

Introducing the integral operators $\overleftrightarrow{\alpha}_{b(j)}^{(i)}$ and $\overleftrightarrow{\beta}_{b(j)}^{(i)}$ which are defined such that

$$\overleftrightarrow{\alpha}_{b(j)}^{(i)} = 4\pi/v^{j}\int_0^v \overleftrightarrow{A}_{b1}^{(i)} v'^{(j+2)} f_{b0} dv' \tag{F-6}$$

and

$$\overleftrightarrow{\beta}_{b(j)}^{(i)} = 4\pi/v^{j}\int_0^{\infty} \overleftrightarrow{A}_{b1}^{(i)} v'^{(j+2)} f_{b0} dv' \tag{F-7}$$

then eq.(F-5) can be expressed as follows:

$$h_{ab} = \sum_{\ell} m_a/(m_{ab}v)\,[\overleftrightarrow{\alpha}^{(\ell)}_{b(\ell)} + \overleftrightarrow{\beta}^{(\ell)}_{b-(\ell+1)}]\,{}_{\ell}\vec{v}^{(\ell)}/((2\ell+1)v^{(\ell)}) \quad . \tag{F-8}$$

In a similar manner, the second Rosenbluth potential function can be expanded in terms of the generalized Legendre polynomials to give

$$g_{ab} = \sum_{\ell}\int_{\vec{v}'} f_{b1}(v')\,[(v_</v_>)^2/(2\ell+3) - 1/(2\ell+1)]\,v_<^{\ell}P_{\ell}(z)\,d^3v'/v_>^{(\ell-1)}$$

$$= \sum_{\ell}([\int_0^v f_{b1}(v')\,[v'^{(\ell+4)}/((2\ell+3)v^{(\ell+1)}) - v'^{(\ell+2)}/((2\ell-1)v^{(\ell-1)})$$

$$]dv' + \int_v^{\infty} f_{b1}(v')\,[v^{(\ell+2)}/((2\ell+3)v'^{(\ell-1)}) - v^{\ell}/((2\ell-1)v'^{(\ell-3)})$$

$$]dv']\,[\int_{\phi'=0}^{2\pi}\int_{\theta'=0}^{\pi} \sin\theta' P_{\ell}(z)\,d\theta' d\phi']) \quad . \tag{F-9}$$

Combining the expansion series for the field particle distribution function with the above expression gives

$$g_{ab} = \sum_{\ell}\sum_{m}\sum_{n} 4\pi/(2\ell+1)]\,1/(2\ell+3)\,(1/v^{(\ell+1)}\int_0^v A^{(\ell)}_{b1mn}Y^{(\ell)}_{mn}(\theta,\phi)\,v'^{(\ell+1)}$$

$$f_{b0}dv' + v^{(\ell+2)}\int_v^{\infty} A^{(\ell)}_{b1mn}Y^{(\ell)}_{mn}(\theta,\phi)\,v'^{(1-\ell)}f_{b0}dv') - 1/(2\ell-1)$$

$$(1/v^{(\ell-1)}\int_0^v A^{(\ell)}_{b1mn}Y^{(\ell)}_{mn}(\theta,\phi)\,v'^{(\ell+2)}f_{b0}dv' + v^{\ell}\int_v^{\infty} A^{(\ell)}_{b1mn}Y^{(\ell)}_{mn}(\theta,\phi)$$

$$v'^{(3-\ell)}f_{b0}dv')] = \sum_{\ell} 4v\pi/(2\ell+1)\,[1/(2\ell+3)\,(1/v^{(\ell+2)}\int_0^v [\overleftrightarrow{A}^{(\ell)}_{b1}\,{}_{\ell}\vec{v}^{(\ell)}$$

$$/v^{(\ell)}]\,v'^{(\ell+1)}f_{b0}dv' + v^{(\ell+1)}\int_0^{\infty} [\overleftrightarrow{A}^{(\ell)}_{b1}\,{}_{\ell}\vec{v}^{(\ell)}/v^{(\ell)}]\,v'^{(1-\ell)}f_{b0}dv')$$

$$- 1/(2\ell-1)(1/v^{\ell}\int_0^v[\overleftrightarrow{A}_{b1}^{(\ell)}\cdot_{\ell}\vec{v}^{(\ell)}/v^{(\ell)}]v'^{(\ell+2)}f_{b0}dv' + v^{(\ell-1)}$$

$$\int_0^{\infty}[\overleftrightarrow{A}_{b1}^{(\ell)}\cdot_{\ell}\vec{v}^{(\ell)}/v^{(\ell)}]v'^{(3-\ell)}f_{b0}dv')] \quad . \tag{F-10}$$

Finally using eqs.(F-6) and (F-7) in eq.(F-10) yields the desired result, namely

$$g_{ab} = \sum_{\ell} v[(\overleftrightarrow{\alpha}_{b(\ell+2)}^{(\ell)} + \overleftrightarrow{\beta}_{b-(\ell+1)}^{(\ell)})/(2\ell+3) - (\overleftrightarrow{\alpha}_{b(\ell)}^{(\ell)} + \overleftrightarrow{\beta}_{b(1-\ell)}^{(\ell)})$$

$$/(2\ell-1)]\cdot_{\ell}\vec{v}^{(\ell)}/((2\ell+1)v^{(\ell)}) \quad . \tag{F-11}$$

With the functional structure of the Rosenbluth potential functions formally established, the field response component of the collision operator can now be constructed by combining eqs.(F-8) and (F-11) with eq.(2.3-22)

$$C_{ab}(f_{a0},f_{b1}) = \sum_{\ell}(\overleftrightarrow{C}_{ab}^{(\ell)}\cdot_{\ell}\vec{v}^{(\ell)}/v^{(\ell)})f_{a0} \tag{F-12}$$

where

$$\overleftrightarrow{C}_{ab}^{(\ell)} = 4\pi m_a\Gamma_{ab}\overleftrightarrow{A}_{b1}^{(\ell)}f_{b0}/m_b + 2\Gamma_{ab}/v_{ta}^2[(2(v/v_{ta})^2 - 1)([\ell + 1]$$

$$[\ell + 2](\overleftrightarrow{\alpha}_{b(\ell+2)}^{(\ell)} + \overleftrightarrow{\beta}_{b-(\ell+1)}^{(\ell)})/(2v[2\ell + 1][2\ell + 3]) - \ell[\ell - 1]$$

$$(\overleftrightarrow{\alpha}_{b(\ell)}^{(\ell)} + \overleftrightarrow{\beta}_{b(1-\ell)}^{(\ell)})/(2v[2\ell + 1][2\ell - 1]) + [\ell + 1]([\ell + 2]$$

$$\overleftrightarrow{\alpha}^{(\ell)}_{b(\ell+2)} - [3\ell + 4]\overleftrightarrow{\beta}^{(\ell)}_{b-(\ell+1)})/(2v[2\ell + 1][2\ell + 3]) - \ell([1 - 3\ell]\overleftrightarrow{\alpha}^{(\ell)}_{b(\ell)} + [\ell - 1]\overleftrightarrow{\beta}^{(\ell)}_{b(1-\ell)})/(2v[2\ell + 1][2\ell - 1]) + m_a([\ell + 1]\overleftrightarrow{\alpha}^{(\ell)}_{b(\ell)} - \ell\overleftrightarrow{\beta}^{(\ell)}_{b-(\ell+1)})/(2m_b v[2\ell + 1])] \,. \tag{F-13}$$

Note that in obtaining the above expression the following tensor identities have been used

$$d\overleftrightarrow{\alpha}^{(i)}_{b(j)}/dv = 4\pi v^2 \overleftrightarrow{A}^{(i)}_{b1} f_{b0} - j\overleftrightarrow{\alpha}^{(i)}_{b(j)}/v$$

$$d\overleftrightarrow{\beta}^{(i)}_{b(j)}/dv = -4\pi v^2 \overleftrightarrow{A}^{(i)}_{b(j)} f_{b0} - j\overleftrightarrow{\beta}^{(i)}_{b(j)}/V$$

$$\vec{\nabla}_v[\overleftrightarrow{K}_\ell \dot{\cdot} \vec{v}^{(\ell)}] = (\vec{v}/v^2)\cdot\vec{\nabla}_v\overleftrightarrow{K}_\ell \dot{\cdot} \vec{v}^{(\ell+1)} + \ell\overleftrightarrow{K}_{(\ell+1)} \dot{\cdot} \vec{v}^{(\ell-1)}$$

$$\vec{\nabla}_v[\overleftrightarrow{K}_\ell \dot{\cdot} \vec{v}^{(\ell+1)}] = (\vec{v}/v^2)\cdot\vec{\nabla}_v\overleftrightarrow{K}_\ell \dot{\cdot} \vec{v}^{(\ell+2)} + \ell\overleftrightarrow{K}_{(\ell-1)} \dot{\cdot} \vec{v}^{(\ell)} + \overleftrightarrow{I}\,\overleftrightarrow{K}_\ell \dot{\cdot} \vec{v}^{(\ell)}$$

$$\vec{\nabla}_v[\overleftrightarrow{K}_{(\ell-1)} \dot{\cdot} \vec{v}^{(\ell-1)}] = [(\vec{v}/v^2)\cdot\vec{\nabla}_v\overleftrightarrow{K}_{(\ell-1)} \dot{\cdot} \vec{v}^{(\ell)}]^T + (\ell-1)\overleftrightarrow{K}_{(\ell-2)} \dot{\cdot} \vec{v}^{(\ell-2)}$$

$$\vec{\nabla}_v\cdot[\overleftrightarrow{K}_\ell \dot{\cdot} \vec{v}^{(\ell+1)}] = ((\vec{v}/v^2)\cdot\vec{\nabla}_v\overleftrightarrow{K} + (3+\ell)\overleftrightarrow{K})_\ell \dot{\cdot} \vec{v}^{(\ell)}$$

$$\vec{\nabla}_v\cdot[\overleftrightarrow{K}_\ell \dot{\cdot} \vec{v}^{(\ell+2)}] = ((\vec{v}/v^2)\cdot\vec{\nabla}_v\overleftrightarrow{K} + (4+\ell)\overleftrightarrow{K})\cdot\vec{v}^{(\ell+1)}$$

$$\vec{\nabla}_v\cdot[\overleftrightarrow{K}_{(\ell-1)} \dot{\cdot} \vec{v}^{(\ell)}] = (\vec{v}/v^2)\cdot\vec{\nabla}_v\overleftrightarrow{K}_\ell \dot{\cdot} \vec{v}^{(\ell+1)} + \overleftrightarrow{K}_{(\ell-1)}\vec{v}^{(\ell-1)}$$

$$\vec{\nabla}_v\cdot[\overleftrightarrow{K}_{(\ell-1)} \dot{\cdot} \vec{v}^{(\ell)}]^T = ((\vec{v}/v^2)\cdot\vec{\nabla}_v\overleftrightarrow{K} + (2+\ell)\overleftrightarrow{K})_{(\ell-1)} \dot{\cdot} \vec{v}^{(\ell-1)}$$

$$\vec{\nabla}_v \cdot [\overleftrightarrow{K}_{(\ell-1)} \cdot \vec{v}^{(\ell-1)}] = (\vec{v}/v^2) \cdot \vec{\nabla}_v \overleftrightarrow{K} \cdot \vec{v}^{(\ell)}$$

$$\vec{\nabla}_v \cdot [\overleftrightarrow{K}_{(\ell-2)} \cdot \vec{v}^{(\ell-2)}] = (\vec{v}/v^2) \cdot \vec{\nabla}_v \overleftrightarrow{K}_{(\ell-1)} \cdot \vec{v}^{(\ell-1)}$$

$$[(\vec{v}/v^2) \cdot \vec{\nabla}_v \overleftrightarrow{K}_{(\ell-1)} \cdot \vec{v}^{(\ell)}]^T = (\vec{v}\vec{v}/v^2) \cdot \vec{\nabla}_v \overleftrightarrow{K}_{(\ell-1)} \cdot \vec{v}^{(\ell-1)} \quad .$$

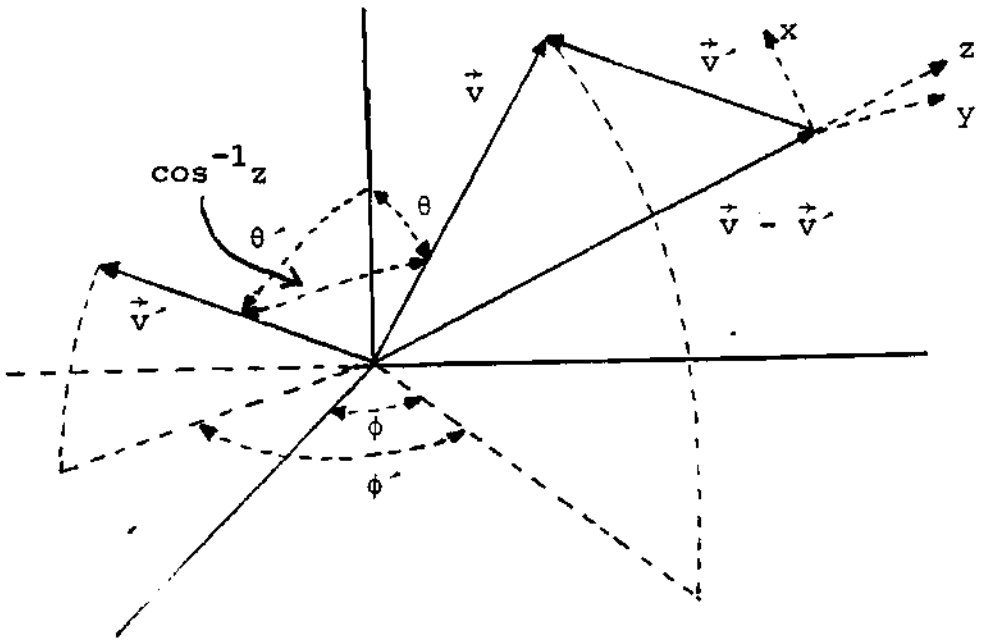

$$z = \cos\theta\cos\theta' + \sin\theta\sin\theta'\cos(\phi - \phi')$$

FIGURE (F-1)

VELOCITY SPACE COORDINATE SYSTEM FOR THE FIELD PARTICLE COMPONENT OF THE COLLISION OPERATOR

APPENDIX G

THE CLASSICAL COMPONENT OF THE FRICTION-FLOW CONSTITUTIVE RELATIONSHIP

In this appendix, the lowest order classical component of the total friction-flow relationship is computed. To this end, the $\ell = 1$ harmonic component of the $O(\delta^1)$ gyroangle dependent component of the particle distribution function can be expressed as follows:

$$\tilde{f}_a^{(1)} = 2\vec{V}_\perp/v_{ta}^2 \cdot \sum_j^1 \vec{U}_{\perp a1j}\bar{L}_j^{3/2}(x_a^2)F_a$$

where the perpendicular flows $\vec{U}_{\perp a1j}$ are given by eq.(2.5-22). Combining eq.(G-1) with eqs.(3.5-1) and (3.5-3) yields

$$<(\hat{n}_\parallel \times \vec{F}_{a(j+1)}) \times \hat{n}_\parallel> = -\sum_{b\ell}\sum <\gamma_{ab}^{j\ell}\vec{U}_{\perp b1\ell}> \tag{G-2}$$

where

$$<\gamma_{ab}^{j\ell}U_{\perp b1\ell}> = <m_a n_a[\{\eta_{ab}^s\bar{L}_j^{3/2}(x_a^2)\bar{L}_\ell^{3/2}(x_a^2)\zeta_{ab}^\ell\} - (m_b n_b/(m_a n_a))[$$
$$\{\eta_{ba}^s\bar{L}_j^{3/2}(x_b^2)\bar{L}_\ell^{3/2}(x_b^2)\}\delta_{j,0} + \{\eta_{ab}^s\bar{L}_j^{3/2}(x_a^2)\}\{\eta_{ba}^s\bar{L}_\ell^{3/2}(x_b^2)\}\delta_{j,1}$$
$$/\{\eta_{ab}^s\}] - (p_b/p_a)\{\eta_{ab}^Q x_a^2\bar{L}_j^{3/2}(x_a^2)\}\{\eta_{ba}^Q x_b^2\bar{L}_\ell^{3/2}(x_b^2)\}\delta_{j,1}/\{\eta_{ab}^Q x_a^4\}$$
$$- \{\eta_{ab}^K x_a^2\bar{L}_j^{3/2}(x_a^2)\}\{\eta_{ab}^K x_a^2\bar{L}_\ell^{3/2}(x_a^2)\zeta_{ab}^\ell\}\delta_{j,1}/\{\eta_{ab}^K x_a^4\}]\vec{U}_{\perp b1\ell}> . \tag{G-3}$$

APPENDIX H

THE BEAM ION DISTRIBUTION FUNCTION

In this appendix, the drift kinetic equation, which governs the behavior of the fast beam ion's distribution function in a tokamak plasma, is developed and solved in the banana regime. To obtain the desired kinetic equation, the beam ion Fokker-Planck collision operator must first be constructed. Now for most present generation beam injected tokamaks the beam ion injection speeds satisfy the criterion $v_{ta} << v_{B0} << v_{te}$, consequently the flow velocity of the ions and electrons in response to the beam can be neglected. In essence, this implies that the total beam ion collision operator can be adequately represented by the test particle component of the collision operator. Another consequence of the injected beam ion's velocity, which serves to simplify the functional structure of the beam ion collision operator, is that the slowing down, parallel diffusion and pitch angle scattering rate characteristic frequencies can be approximated by their asymtotic forms. In particular,

BEAM ION-ELECTRON INTERACTIONS

$$\underset{x_e \to 0}{\text{Limit}} \, (\eta_{Be}^{s}) \to n_e m_e / (m_{Be} \tau_s) \tag{H-1}$$

$$\underset{x_e \to 0}{\text{Limit}} (\eta''_{Be}) = \underset{x_e \to 0}{\text{Limit}} (\overleftrightarrow{D}_{Be}) \to 0 \tag{H-2}$$

BEAM ION-BACKGROUND ION INTERACTIONS

$$\underset{x_i \to \infty}{\text{Limit}} (\eta^s_{Bi}) \to m_i/(m_{Bi}\tau_s)(v_c/v)^3 \tag{H-3}$$

$$\underset{x_i \to \infty}{\text{Limit}} (\eta''_{Bi}) \to 0 \tag{H-4}$$

$$\underset{x_i \to \infty}{\text{Limit}} (\eta^{\perp}_{Bi}) \to m_i/(m_B\tau_s)(v_c/v)^3 = (m_{Bi}/m_i)\eta^s_{Bi} \tag{H-5}$$

where in obtaining eqs.(H-1) through (H-5) the following limit relationships have been employed:

$$\underset{x_e \to \infty}{\text{Limit}} (\xi(x_e)/x_e) \to 4/(3\sqrt{\pi}) \tag{H-6}$$

$$\underset{x_i \to \infty}{\text{Limit}} (\xi(x_i)) \to 1/(2x_i^2) \tag{H-7}$$

$$\underset{x_i \to \infty}{\text{Limit}} (\phi(x_i) - \xi(x_i)) \to (1 - 1/x_i^2) \tag{H-8}$$

and have defined the Spitzer slowing down time [107] τ_s and the critical velocity [110] v_c such that

$$\tau_s = 3\sqrt{\pi}m_e v_{te}^3/(4m_B n_e \Gamma_{Be}) = 3\sqrt{\pi}Z_i^2 m_e v_{te}^3/(4m_B n_e \Gamma_{Bi}) \tag{H-9}$$

and

$$v_c = (3\sqrt{\pi} Z_i^2 n_i m_e/(4 n_e m_i))^{1/3} v_{te} \tag{H-10}$$

respectively. Finally combining eqs.(H-1) through (H-5) with eq.(2.3-10) of chapter II yields

$$C_B(f_B) = \sum_j C_{Bj}(f_B, F_j) = C_{Be}(f_B F_e) + \sum_{a \neq e} C_{Ba}(f_B, F_a) =$$
$$\vec{v}/(\tau_s v^3) \cdot \vec{\nabla}_v [(v^3 + \bar{v}_c^3) f_B] + \beta/(2\tau_s)(\bar{v}_c/v)^3 L f_B \tag{H-11}$$

where

$$\beta = \sum_{a \neq e} (n_a Z_a^2/n_e) / (\sum_{a \neq e} (n_a Z_a^2 m_B/(n_e m_a))) \tag{H-12}$$

and

$$\bar{v}_c = \sum_{a \neq e} v_c \, . \tag{H-13}$$

With the functional structure of the beam ion collision operator formally established, the desired kinetic equation can be now constructed. For the purposes of thesis, only those beam ion velocities which lie in the velocity range

$v_{ta} << v < v_c$ will be considered since the emphasis in the text of this thesis is on ion transport. As a result, the effect of the electric field on the beam ion distribution function will be neglected in formulating the beam ion kinetic equation. In addition, for the lowest order approximation considered here, the charge exchange effects ($\tau_{cx} >> \tau_s$) will be ignored in this analysis. In view of these assumptions the beam ion kinetic equation can be obtained by combining eqs.(2.2-3) and (H-11) to give

$$\partial f_B/\partial t + \vec{v}_{\parallel}\cdot\vec{\nabla} f_B = \vec{v}/(\tau_s v^3)\cdot\vec{\nabla}_v[(v^3 + \bar{v}_c)f_B] + \beta/(2\tau_s)(\bar{v}_c/v)^3 L f_B + S_B \tag{H-14}$$

where $S(f_B)$ is the external source term.

To obtain a solution to the beam ion kinetic equation in the banana regime, the beam ion distribution function can be expanded in powers of γ_B :

$$f_B = \sum_n g_{B(n)} = g_{B(0)} + g_{B(1)} + \cdots + g_{B(n)} + \cdots \tag{H-15}$$

where $\gamma_B = \eta_s/\omega_{tB}$ with ω_{tB} being the bounce frequency of the beam ions η_s is the Spitzer slowing down frequency and $g_{B(n)} \sim O(\gamma_B^n)$. Using this series in eq.(H-14) gives the following hierarchy of kinetic equations:

$$O(\gamma_B^0): \quad \vec{v}_{\parallel}\cdot\vec{\nabla}g_{B(0)} = 0 \tag{H-16}$$

$$O(\gamma_B^1): \quad \partial g_{B(0)}/\partial t + \vec{v}_{\parallel}\cdot\vec{\nabla}g_{B(1)} = \vec{v}/(\tau_s v^3)\cdot\vec{\nabla}_v[(v^3 + \bar{v}_c^3)g_{B(0)}] + \beta(\bar{v}_c/v)^3 L g_{B(0)}/(2\tau_s) + S_B \tag{H-17}$$

etc.

The solution to eq.(H-16) can be obtained directly by integration with the result

$$g_{B(0)} = h_B(\psi,\mu,H) \ . \tag{H-18}$$

Using this solution in eq.(H-17) yields

$$\partial h_B/\partial t + \vec{v}_{\parallel}\cdot\vec{\nabla}g_{B(1)} = \vec{v}/(\tau_s v^3)\cdot\vec{\nabla}_v[(v^3 + \bar{v}_c^3)h_B] + \beta/(2\tau_s)(\bar{v}_c/v)^3 L h_B + S_B \ . \tag{H-19}$$

To obtain the functional structure of the surface function h_B, the bounce averaging operator is applied to both sides of eq.(H-19) yielding

PASSING BEAM IONS

$$\int_0^{2\pi}(\partial h_B/\partial t)B\sqrt{g}d\chi/v_{\parallel} = \int_0^{2\pi}(\vec{v}/(\tau_s v^3)\cdot\vec{\nabla}_v[(v^3 + \bar{v}_c^3)h_B] + \beta/(2\tau_s)(\bar{v}_c/v)^3 L h_B + S_B)B\sqrt{g}d\chi/v_{\parallel} \tag{H-20}$$

TRAPPED BEAM IONS

$$\sum_{\sigma=-1}^{1} \int_{\chi_1}^{\chi_2} (\partial h_B/\partial t) B\sqrt{g}d\chi/|v_{\parallel}| = \sum_{\sigma=-1}^{1} \int_{\chi_1}^{\chi_2} (\vec{v}/(\tau_s v^3)\cdot\vec{\nabla}_v[(v^3 + \bar{v}_c^3)$$

$$h_B] + \beta/(2\tau_s)(\bar{v}_c/v)^3 L h_B + S_B) B\sqrt{g}d\chi/|v_{\parallel}| \tag{H-21}$$

where here the pitch angle basis $\{\lambda, v\}$ has been employed in constructing eqs.(H-20) and (H-21). Now since the functional structure of the beam ion distribution function is only needed to calculate the quantity $(v_c/v_B)^3$, which is relatively independent of the toroidal effects inherent in tokamaks, the smaller order toroidal trapping effects will be neglected in this analysis, and therefore only the passing regime will be considered here. In order to facilitate the ensuing analysis, a change of velocity space variables from the pitch angle basis to the velocity basis $\{\zeta, v\}$ is made where

$$\zeta = (1 - \lambda)^{1/2} . \tag{H-22}$$

In terms of this coordinate basis set the pitch angle operator assumes the general form

$$L = 2\langle B^2\rangle^{1/2} v_{\parallel}/(vB)\partial(\lambda v_{\parallel}/v\partial/\partial\lambda)/\partial\lambda + \langle B^2\rangle^{1/2} v_{\parallel}/(v\zeta B)\partial((1 -$$

$$\zeta^2) v_{\parallel}/(v\zeta)\partial/\partial\zeta)/\partial\zeta \tag{H-23}$$

and therefore eq.(H-20) can be expressed as follows:

$$\partial h_B/\partial t = \vec{v}/(\tau_s v^3)\cdot\vec{\nabla}_v[(v^3 + \bar{v}_c^3)h_B] + \beta/(2\tau_s)(\bar{v}_c/v)^3(1/\alpha(\zeta)$$
$$\partial[(1-\zeta^2)\kappa(\zeta)\partial h_B/\partial\zeta]/\partial\zeta) + \hat{S}_B \tag{H-23}$$

where

$$\alpha(\zeta) = \zeta\langle B^2\rangle^{1/2}/(2\pi)\S d\theta/[\zeta^2 B - (B - \langle B^2\rangle^{1/2})]^{1/2} =$$
$$2\zeta/\pi K(2\varepsilon/\zeta^2) \tag{H-24}$$

and

$$\kappa(\zeta) = 1/(2\pi\zeta\langle B^2\rangle^{1/2})\S[\zeta^2 B - (B - \langle B^2\rangle^{1/2})]^{1/2}d\theta =$$
$$2/\pi E(2\varepsilon/\zeta^2) \tag{H-25}$$

with the functions E and K representing elliptical integrals of the first and second kind and S_B is a bounced averaged source function. Note here that for the sake of simplicity, the to large aspect limit has been assumed in obtaining eq.(H-23). Now for the lowest order approximation considered here, the functions $\alpha(\zeta)$ and $\kappa(\zeta)$ will be approximated by their limiting values near $\zeta = 1$. Now upon using this approximation for eq.(H-23), transforming the result to a coordinate frame which is moving with the plasma and using the Galilean invariance property of the collision operator yields

$$\tau_s \partial h_B/\partial t = (\vec{V}/V^3)\cdot\vec{\nabla}_V[(V^3 + \bar{v}_c^3)h_B] + \beta(\bar{v}_c/V)^3/2(\partial[(1 - \zeta^2)\partial h_B/\partial\zeta]/\partial\zeta) + \tau_s\hat{S}_B \tag{H-26}$$

the solution of which can be obtained by separation of variables. In particular since the angular component of this equation reduces to Legendre equation, then the solution to eq.(H-26) can be expressed in the separable form

$$h_B(r,\zeta,V,t) = \sum_\ell h_{B\ell}(r,V,t)P_\ell(\zeta) \tag{H-27}$$

where $P_\ell(\zeta)$ are the Legendre polynomials. Combining eqs.(H-26) and (H-27) gives

$$\sum_\ell \tau_s P_\ell(\zeta)\partial h_{B\ell}/\partial t = \sum_\ell [P_\ell(\zeta)(\vec{V}/V^3)\cdot\vec{\nabla}_V[(V^3 + \bar{v}_c^3)h_{B\ell}] + \beta(v_c/V)^3 h_{B\ell}/2(\partial[(1 - \zeta^2)\partial P_\ell(\zeta)/\partial\zeta]/\partial\zeta) + \tau_s\hat{S}_{B\ell}P_\ell(\zeta)] \ . \tag{H-28}$$

Noting that

$$d[(1 - \zeta^2)dP_\ell(\zeta)/d\zeta]/d\zeta = -\ell(\ell+1)P_\ell(\zeta) \tag{H-29}$$

and

$$\int_{-1}^{1} P_\ell(\zeta)P_m(\zeta)d\zeta = 2\delta_{m,\ell}/(2\ell + 1) \tag{H-30}$$

then multiplying eq.(H-28) by $P_m(\zeta)$ and and using the above

$$\tau_s \partial h_{B\ell}/\partial t = (\vec{V}/V^3)\cdot\vec{\nabla}_V[(V^3 + \bar{v}_c^3)h_{B\ell}] + \beta(\bar{v}_c/V)^3\ \ell(\ell+1)h_{B\ell}/2 + \tau_s\hat{S}_B \tag{H-31}$$

where here the source function function has been defined such that [120]

$$\hat{S}_B(r,\zeta,V,t) = \sum_\ell \hat{S}_{B\ell}(r,V,t)P_\ell(\zeta) = \sum_\ell S(r)H(t)K_\ell\delta(V - v_{B0})P_\ell(\zeta)/V^2 \tag{H-32}$$

with H(t) being a step function which is unity only when the beam source is turned on and

$$S(r) = \dot{n}_B = (I_0/e)H(r)/((2\pi R_0)(\pi a^2)) \tag{H-33}$$

with I_0 being the neutral beam equivalent, $(2\pi R_0)(\pi a^2)$ being the plasma volume and H(r) being the spatial shape factor [121].

To solve eq.(H-31), the order of the differential equation is reduced via the transformation [122]:

$$\partial V/\partial t = -(V^3 + \bar{v}_c^3)/(\tau_s V^2) \tag{H-34}$$

therefore

$$-1/(3\tau_s)\partial(V^3 + \bar{v}_c^3)/(V^3 + \bar{v}_c^3) = -\partial t \tag{H-35}$$

or

$$(\tau_s/3)\ln(V^3 + \bar{v}_c^3) + t = k = \text{constant} \quad . \tag{H-36}$$

Upon making the dependent coordinate transformation from (V,t) to (k,t) gives

$$\tau_s \partial\tilde{h}_{B\ell}/\partial t|_V - (V^3 + \bar{v}_c^3)/V^2 \partial\tilde{h}_{B\ell}/\partial V|_t = \tau_s(\partial\tilde{h}_{B\ell}/\partial t|_k + \partial k/\partial t$$

$$\partial\tilde{h}_{B\ell}/\partial k) - (V^3 + \bar{v}_c^3)/V^2(\partial k/\partial V)(\partial\tilde{h}_{B\ell}/\partial k) = \tau_s \partial\tilde{h}_{B\ell}/\partial t|_k \tag{H-37}$$

where

$$\tilde{h}_{B\ell} = (V^3 + \bar{v}_c^3)h_{B\ell} \tag{H-38}$$

and

$$\tilde{s}_{B\ell} = (V^3 + \bar{v}_c^3)\hat{s}_{B\ell} \quad . \tag{H-39}$$

In view of eqs.(H-34) through (H-39), then eq.(H-31) reduces to the following:

$$\tau_s \partial \tilde{h}_{B\ell}/\partial t|_k + \beta(\bar{v}_c/V)^3 \ell(\ell+1)\tilde{h}_{B\ell}/2 = \tau_s \tilde{S}_{B\ell} \tag{H-40}$$

the standard solution of which is [122]

$$\tilde{h}_{B\ell} = e^{-\int[\beta(\bar{v}_c/V)^3 \ell(\ell+1)]dt/(2\tau_s)} (\int \tilde{S}_{B\ell} e^{\int[\beta(\bar{v}_c/V)^3 \ell(\ell+1)]dt} /(2\tau_s)dt) \ . \tag{H-41}$$

Using eq.(H-36) for dt in the above expression and carrying out the indicated integrals gives

$$\int[\beta(\bar{v}_c/V)^3 \ell(\ell+1)]dt/(2\tau_s) = -\beta\ell(\ell+1)/6(\int(\bar{v}_c/V)^3 d(V^3)/(V^3 + \bar{v}_c^3)) = -(\beta\ell(\ell+1)/6)\ln[(V^3 + \bar{v}_c^3)/V^3] \tag{H-42}$$

and

$$\int \tilde{S}_{B\ell} e^{\int[\beta(v_c/V)^3 \ell(\ell+1)]dt/(2\tau_s)} dt = S\tau_s K_\ell \int[(V^3 + \bar{v}_c^3)/V^3]^{\ell(\ell+1)\beta/6} \delta(V - v_{B0})dV = S\tau_s K_\ell[(v_{B0}^3 + \bar{v}_c^3)/v_{B0}^3]^{\ell(\ell+1)\beta/6} \ . \tag{H-43}$$

Finally combining eqs.(H-42) and (H-43) with eq.(H-41) gives the desired result at time $t = 0$, namely

$$h_{B\ell} = [S\tau_s K_\ell (v_{B0}^3 + \bar{v}_c^3)^{\ell(\ell+1)\beta/6} (V/v_{B0})^{\ell(\ell+1)\beta/6}] / [(V^3 + \bar{v}_c^3)^{(1 + \ell(\ell+1)\beta/6)}] \tag{H-44}$$

or in view of eq. (H-27)

$$f_B = \sum_\ell [S\tau_s K_\ell (v_{B0}^3 + \bar{v}_c^3)^{\ell(\ell+1)\beta/6} (V/v_{B0})^{\ell(\ell+1)\beta/6}] / [(V^3 + \bar{v}_c^3)^{(1 + \ell(\ell+1)\beta/6)}] P_\ell(\zeta) \ . \tag{H-45}$$

APPENDIX I

CALCULATION OF THE PARALLEL FRICTION-FLOW CONSTITUTIVE RELATIONSHIP FOR A TWO SPECIE BEAM INJECTED PLASMA IN THE LONG MEAN FREE PATH REGIME

In this appendix, the lowest order parallel collisional friction moment (i.e. j = 0) is calculated in the banana regime for a two specie beam injected plasma consisting of a dominant hydrogenic ion and a light impurity ion. For simplicity, the large aspect ratio /low beta limit will be assumed in this calculation. Using eq.(3.5-5) of the main text of this thesis, then it follows that the desired neoclassical friction-flow constitutive relationship becomes

$$\langle I\hat{n}_{\parallel}\cdot\vec{R}_{iz}/B\rangle = -\sum_{\ell}^{1}[(\langle I\bar{\gamma}_{iz}^{0\ell}U_{\parallel i1\ell}/B\rangle - \langle I\bar{\gamma}_{zi}^{0\ell}U_{\parallel z1\ell}/B\rangle) + (\langle I\bar{\gamma}_{iz}^{0\ell *} U_{\parallel i1\ell}/B\rangle - \langle I\bar{\gamma}_{zi}^{0\ell *}U_{\parallel z1\ell}/B\rangle)] \tag{I-1}$$

where the coefficients $\bar{\gamma}_{iz}^{0\ell}$ and $\bar{\gamma}_{zi}^{0\ell}$ are given by eq.(3.5-6) for j = 0. To calculate the distortion component of eq.(I-1), eq.(3.3-73) can be used in conjunction with eq.(2.5-23) to give

$$\langle I\bar{\gamma}_{iz}^{0\ell *}U_{\parallel i1\ell}/B\rangle \approx \sum_{km}^{11}\sum(\bar{\upsilon}_{iz}^{\ell km}\langle n_i IU_{+i1\ell}^{\chi}/B\rangle + \bar{\mu}_{iz}^{\ell km}\langle (n_i)^{\ell} IU_{i1\ell}^{\chi}\rangle + \bar{\gamma}_{iz}^{\ell km}\langle n_i IV_{\parallel B}/B\rangle) \tag{I-2}$$

and

$$<I\bar{\gamma}^{0\ell}_{zi}{}^{*}U_{\parallel z1\ell}/B> \cong \sum_{km}^{11}\sum (\bar{\upsilon}^{\ell km}_{zi}<n_z IU^{\chi}_{\perp z1\ell}/B> + \bar{\mu}^{\ell km}_{zi}<(n_z)^{\ell} IU^{\chi}_{z1\ell}> + \bar{\gamma}^{\ell km}_{zB}<n_z IV_{\parallel B}/B>)$$

(I-3)

where

$$\bar{\upsilon}^{\ell km}_{iz} = \bar{\kappa}^{\ell km}_{iz} + \bar{\mu}^{\ell km}_{iz}$$

(I-4a)

and

$$\bar{\upsilon}^{\ell km}_{zi} = \bar{\kappa}^{\ell km}_{zi} + \bar{\mu}^{\ell km}_{zi}$$

(I-4b)

with

$$\kappa^{\ell km}_{iz} \cong m_i/\{[\bar{L}^{3/2}_{\ell}(x^2_i)]^2\}[\{\bar{\eta}^{s}_{iz}\bar{L}^{3/2}_{\ell}(x^2_i)[(\bar{f}^{B}_{T}\bar{L}^{3/2}_{k}(x^2_i)\bar{\eta}^{\perp}_{i}/\bar{\eta}^{B}_{i} - \{\bar{f}^{B}_{T}\bar{L}^{3/2}_{k}(x^2_i)\bar{\eta}^{\perp}_{i}/\bar{\eta}^{B}_{i}\})\delta_{m,k}\delta_{\ell,0} - (\{[\bar{L}^{3/2}_{\ell}(x^2_i)]^2\} - \{\bar{f}^{B}_{c}\bar{L}^{3/2}_{k}(x^2_i)\bar{L}^{3/2}_{\ell}(x^2_i)\bar{\eta}^{s}_{i}/\bar{\eta}^{B}_{i}\})\delta_{m,k}\delta_{\ell,1}]\}]$$

(I-5a)

$$\kappa^{\ell km}_{zi} \cong m_z/\{[\bar{L}^{3/2}_{\ell}(x^2_z)]^2\}[\{\bar{\eta}^{s}_{zi}\bar{L}^{3/2}_{\ell}(x^2_z)[(\bar{f}^{B}_{T}\bar{L}^{3/2}_{k}(x^2_z)\bar{\eta}^{\perp}_{z}/\bar{\eta}^{B}_{z} - \{\bar{f}^{B}_{T}\bar{L}^{3/2}_{k}(x^2_z)\bar{\eta}^{\perp}_{z}/\bar{\eta}^{B}_{z}\})\delta_{m,k}\delta_{\ell,0} - (\{[\bar{L}^{3/2}_{\ell}(x^2_z)]^2\} - \{\bar{f}^{B}_{c}\bar{L}^{3/2}_{k}(x^2_z)\bar{L}^{3/2}_{\ell}(x^2_z)\bar{\eta}^{s}_{z}/\bar{\eta}^{B}_{z}\})\delta_{m,k}\delta_{\ell,1}]\}]$$

(I-5b)

$$\bar{\mu}^{\ell km}_{iz} \cong m_i/\{[\bar{L}^{3/2}_{\ell}(x^2_i)]^2\}[\{\bar{\eta}^{s}_{iz}\bar{L}^{3/2}_{\ell}(x^2_i)[(\bar{f}^{B}_{c}\bar{L}^{3/2}_{\ell}(x^2_i)A^{km}_{ii}\delta_{\ell,0}/\bar{\eta}^{B}_{i} -$$

$$\{\bar{f}_c^B \bar{L}_\ell^{3/2}(x_i^2) A_{ii}^{km}/\bar{\eta}_i^B\}) - m_z n_z/(m_i n_i)(\bar{f}_c^B \bar{L}_\ell^{3/2}(x_z^2) A_{zi}^{km} \delta_{\ell,0}/\bar{\eta}_z^B - \bar{f}_c^B \bar{L}_\ell^{3/2}(x_z^2) A_{zi}^{km}/\bar{\eta}_z^B)]] \tag{I-6}$$

$$\bar{\mu}_{zi}^{\ell km} \cong m_z/\{[\bar{L}_\ell^{3/2}(x_z^2)]^2\}[\{\eta_{zi}^{-s} \bar{L}_\ell^{3/2}(x_z^2)[(\bar{f}_c^B \bar{L}_\ell^{3/2}(x_z^2) \bar{A}_{zz}^{km} \delta_{\ell,0}/\bar{\eta}_z^B - \{\bar{f}_c^B \bar{L}_\ell^{3/2}(x_z^2) A_{zz}^{km}/\bar{\eta}_z^B\}) - m_i n_i/(m_z n_z)(\bar{f}_c^B \bar{L}_\ell^{3/2}(x_z^2) A_{iz}^{km} \delta_{\ell,0}/\bar{\eta}_i^B - \{\bar{f}_c^B \bar{L}_\ell^{3/2}(x_i^2) A_{iz}^{km}/\bar{\eta}_i^B\})]] \tag{I-7}$$

$$\bar{\gamma}_{iB}^{\ell km} \cong m_i/\{[\bar{L}_\ell^{3/2}(x_i^2)]^2\}[\{\bar{\eta}_{iz}^{s} \bar{L}_\ell^{3/2}(x_i^2)[\bar{f}_c^B \bar{L}_\ell^{3/2}(x_i^2) \bar{\gamma}_{iB}^{s} \delta_{\ell,0}/\bar{\eta}_i^B - \{\bar{f}_c^B \bar{L}_\ell^{3/2}(x_i^2) \bar{\gamma}_{iB}^{s}/\bar{\eta}_i^B\}]\}] \tag{I-8}$$

$$\bar{\gamma}_{zB}^{\ell km} \cong m_z/\{[\bar{L}_\ell^{3/2}(x_z^2)]^2\}[\{\eta_{zi}^{-s} \bar{L}_\ell^{3/2}(x_z^2)[\bar{f}_c^B \bar{L}_\ell^{3/2}(x_z^2) \bar{\gamma}_{zB}^{s} \delta_{\ell,0}/\bar{\eta}_z^B - \{\bar{f}_c^B \bar{L}_\ell^{3/2}(x_z^2) \bar{\gamma}_{zB}^{s}/\bar{\eta}_z^B\}]\}] \tag{I-9}$$

and

$$A_{ab}^{km} = \eta_{ab}^{s}\{m_b n_b \eta_{ba}^{s} \bar{L}_m^{3/2}(x_b^2)\}/\{m_a n_a \eta_{ab}^{s}\} . \tag{I-10}$$

Note here that in obtaining the above expression the distortion component of the particle distribution function has been neglected in the evaluation of the collisional field momentum restoring terms associated with the function

$C^{B*}_{i\ell}$ and $C^{B*}_{z\ell}$ since only the lowest order coupling is desired.

Finally, combining eqs(I-2) through (I-10) with eq.(I-1) yields the desired result, namely

$$<I\hat{n}_{\shortparallel}\cdot\vec{R}_{iz}/B> \cong -\sum_{\ell}\sum_{k}\sum_{m}^{1}[(\nu^{\ell km}_{iz}<n_i IU^{X}_{+ilm}/B> - \bar{\nu}^{\ell km}_{zi}<n_z IU^{X}_{+zlm}/B>) + (\bar{\eta}^{\ell km}_{iz}<(n_i)^{\ell} IU^{X}_{ilm}> - \bar{\eta}^{\ell km}_{zi}<(n_z)^{\ell} IU^{X}_{zlm}>) + (\bar{\gamma}^{\ell km}_{iB}<n_i IV_{\shortparallel B}/B> - \bar{\gamma}^{\ell km}_{zB}<n_z IV_{\shortparallel B}/B>)] \tag{I-11}$$

where

$$\bar{\nu}^{\ell km}_{iz} = \bar{\gamma}^{\ell km}_{iz} + \bar{\upsilon}^{\ell km}_{iz}$$

$$\bar{\nu}^{\ell km}_{zi} = \bar{\gamma}^{\ell km}_{zi} + \bar{\upsilon}^{\ell km}_{zi}$$

$$\bar{\eta}^{\ell km}_{iz} = \bar{\gamma}^{\ell km}_{iz} + \bar{\mu}^{\ell km}_{iz}$$

and

$$\bar{\eta}^{\ell km}_{zi} = \bar{\gamma}^{\ell km}_{zi} + \bar{\mu}^{\ell km}_{zi}$$

with

$$\bar{\gamma}^{\ell km}_{iz} = \bar{\gamma}^{0\ell}_{iz}\delta_{m,\ell}$$

and

$$\bar{\gamma}_{zi}^{\ell km} = \bar{\gamma}_{zi}^{0\ell}\delta_{m,\ell} \ .$$

Note that the above expression for the parallel friction moment can be generalized to the case where one (or both) of the ions are in the plateau regime by simply replacing $\bar{f}_T^B$ with $f_T(V) = \bar{f}_T^B/(1 + (\bar{f}_T^B/\bar{f}_T^P))$.

BIBLIOGRAPHY

1. D. Post, Proc. 10th Inter. Conf. on Plasma Physics and Controlled Nuclear Fusion, IAEA (Vienna, 1984).

2. J. B. Taylor, Phys. Fluids 4, 1142 (1961).

3. P. H. Rutherford, Phys. Fluids 17, 1782 (1974).

4. F. L. Hinton and T. B. Moore, Nucl. Fusion 14, 831 (1974).

5. M. Bobrowolny and A. Nocentini, Nucl. Fusion 14, 831 (1974).

6. J. W. Connor, Plasma Physics 15, 765 (1973).

7. F. L. Hinton and R. D. Hazeltine, Rev. Mod. Phys. 48, 239 (1976).

8. S. P. Hirshman and D. J. Sigmar, Nucl. Fusion 21, 21, 1079 (1981).

9. D. M. Meade, Nucl. Fusion 14, 289 (1974).

10. R. W. Conn and J. Kesner, Nucl. Fusion 15, 775 (1975).

11. D. L. Jassby, Nucl. Fusion 15. 453 (1975).

12. R. V. Jensen, D. E. Post and D. L. Jassby, Princeton Plasma Physics Lab (PPPL) report, PPPL-1350 (1977).

13. T. Ohkawa, General Atomic Report GA-12926 (1974).

14. Z. El Derini and G. A. Emmert, Nucl. Fusion 16, 342 (1976).

15. J. W. Connor and J. C. Cordey, Nucl. Fusion 14, 185 (1974).

16. J. D. Callen, et al., Proc. Inter. Conf. on Plasma Physics and Controlled Nuclear Fusion, IAEA (Tokyo, 1975) 1, 645.

17. W. M. Stacey, Jr., and D. J. Sigmar, Phys. Fluids 22, 2000 (1979).

18. W. M. Stacey, Jr., and D. J. Sigmar, Nucl. Fusion 19, 1665 (1979).

19. D. R. Eames, Ultra-soft X-ray Emission from the Princeton Large Torus, Ph.D. Thesis, Princeton University, (1981).

20. R. C. Isler, et al., Phys. Rev. Lett., 47, 649 (1981).

21. C. E. Bush, et al., Nucl. Fusion 23, 67 (1983).

22. S. P. Hirshman, D. J. Sigmar, and J. F. Clarke, Phys. Fluids 19, 656 (1976).

23. D. Pfirsch and A. Schluter, Max- Planck-Institute Report MPI/PA/7/62 (1962).

24. G. Knorr, Phys. Fluids 8, 1334 (1965).

25. H. K. Wimmel, Nucl. Fusion 10, 117 (1970).

26. E. K. Maschke, Plasma Physics 14, 141 (1972).

27. J. L. Johnson and S. von Goeler, Phys. Fluids 12. 255 (1969).

28. P. H. Rutherford, Phys. Fluids 13, 482 (1970).

29. E. A. Frieman, Phys. Fluids 13, 490 (1970).

30. A. A. Galeev and R. Z. Sagdeev, Zh. Eksp Teor, Fiz. 53, 348 (1967) [Sov. Phys. JETP, 26, 233 (1968)].

31. R. Z. Sagdeev and A. A. Galeev, Sov. Phys. Dokl. 189, 1204 (1969).

32. L. M. Kovrizhnykh, Zh. Eksp. Teor, Fiz. 56, 877 (1969) [Sov. Phys. JETP, 29, 475 (1969)].

33. M. N. Rosenbluth, R. D. Hazeltine, and F. L. Hinton, Phys. Fluids 15, 116 (1972).

34. M. N. Rosenbluth, P. H. Rutherford J. B. Taylor, E. A. Frieman, and L. M. Kovrizhnykh, Proceedings of the Fourth International Conference on Plasma Physics and Controlled Nuclear Fusion Research, Madison, Wisconsin, IAEA-CN-28/C-12, 495 (1971).

35. A. H. Glasser and W. N. Thompson, Phys. Fluids 16, 95 (1973).

36. T. E. Stringer, Phys. Fluids 13, 810 (1970).

37. D. K. Bhadra, C. S. Liu, and T. Ohkawa, Phys. Fluids 15, 1338 (1962).

38. F. L. Hinton and M. N. Rosenbluth, Phys. Fluids 16, 836 (1973).

39. S. P. Hirshman and D. J. Sigmar, Phys. Fluids 20, 418 (1977).

40. R. D. Hazeltine and A. A. Ware, Nucl. Fusion 16, 538 (1976).

41. S. P. Hirshman, Phys. Fluids, 19, 155, (1976).

42. S. Suckewer, et al., Phys. Rev. Lett. 43, 207 (1979); also PPPL-1542 (1979).

43. R. C. Isler, et al., Nucl. Fusion 23, 1017 (1983); also R. C. Isler and L. E. Murry, Fusion Energy Division Annual Progress Report, ORNL-5843, (1981).

44. K.H. Burrell, T. Ohkawa and S. K. Wong, Phys. Rev. Ltr. 47, 511 (1981).

45. A. A. Ware and H. C. Wiley, Phys. Fluids 21, 936 (1981).

46. W. M. Stacey, Jr., R. B. Bennett and D. J. Sigmar, Neutral Beam Driven Impurity Flow Reversal in Tokamaks, Georgia Institute of Technology report GTFR-42 (1983).

47. W. M. Stacey, Jr. and D. J. Sigmar, Phys. Fluids 27, 2308 (1984).

48. F. L. Hinton, R. W. Harvey, J. A. Robertson, and S. K. Wong, Prompt Neutral Beam Momentum Input to Tokamak Plasmas, Georgia Technologies Inc. GA-A17499 (1984).

49. S. Suckewer, et al., Nucl. Fusion 21, 1301 (1981); also PPPL-1792 (1981).

50. R. C. Isler, et al., Rotation Scalings and Momentum Confinement in Neutral-Beam Injected ISX-B Plasmas, Oak Ridge National Laboratory Report.

51. K. Brau, et al., Nucl. Fusion 23, 1643 (1983).

52. K. T. Tsang and E. A. Frieman, Phys. Fluids 19, 747 (1976).

53. D. J. Sigmar, J. F. Clarke and S. P. Hirshman, Oak Ridge National Laboratory Report TM-4605 (1974).

54.B. B. Kadomtsev and O. P. Pogutse, Reviews of Plasma Physics, Edited by M. A. Leontovich (consultants Bureau, New York, 1970), Vol. 5.

55. R. A. Sagdeev and A. A. Galeev, Nonlinear Plasma Theory, (Benjamin, New York, 1969).

56. W. Horton, Phys. Rev. Lett. 37, 1269 (1976).

57. P. Graff and D. Pfirsch, Z. Natruforsch 37a, 795 (1982).

58. R. D. Hazeltine, Phys. Fluids 17, 961 (1974).

59. S. K. Wong and K. H. Burrell, Phys. Fluids 25, 1863 (1982).

60. F. L. Hinton and S. K. Wong, Phys. Fluids 28, 3082 (1985).

61. W. M. Stacey, Jr. and D. J. Sigmar, Phys. Fluids 28, 2800 (1985).

62. J. T. Hogan, Phys. Fluids 27, 2308 (1984).

63. P. J. Catto, Phys. Fluids 29, 1587 (1986).

64. R. B. Bennett, Neutral Beam Driven Impurity Flow Reversal in Tokamaks, Ph.D. thesis, Georgia Institute of Technology (1984).

65.S. L. Braginski, Reviews of Plasma Physics, 1, (Consultants Bureau, New York 1965).

66. W. M. Stacey, Jr., C. M. Ryu and M. A. Malik, Nuclear Fusion 26, 293 (1986).

67. W. M. Stacey, Jr. and D. J. Sigmar, Nucl. Fusion 25, 463 (1985).

68. C. S. Chang and R. D. Hazeltine, Nucl. Fusion 20, 1397 (1980).

69. C. S. Chang and R. D. Hazeltine, Phys. Fluids 25, 536 (1982).

70. C. S. Chang, Phys. Fluids 26, 2140 (1983).

71. K. C. Shaing and J. D. Callen, Calculation of Parallel Viscosity in Plateau Regime, University of Wisconsin report UWFDM-472 (1982).

72. S. Chapman and T. G. Cowling, The Mathematical Theory of Non-Uniform Gases, (Cambridge University Press, Cambridge, 1958).

73. K. R. Symon, Mechanics, (Addison-Wesley Publishing Company, Reading, Mass., 1971).

74. H. Goldstein, Classical Mechanics, (Addison-Wesley Publishing Company, Reading, Mass., 1965).

75. R. C. Tolman, The Principles of Statistical Mechanics, (Oxford University Press, London, England, 1948).

76. T. G. Northrop, Annals of Physics 15, 79 (1961).

77. A. Banos, J. Plasma Phys. 1, 305 (1967); T. G. Northrop, The Adiabatic Motion of Charged Particles, Interscience, N.Y., (1963).

78. A. I. Morosov and L. S. Solov'ev, in Reviews of Plasma Physics, edited by M. A. Leontovich (Consultants Bureau, New York, 1966) Vol. 2, 201.

79. J. M. Greene and J. L. Johnson, Phys. Fluids 4 875 (1961).

80. L. S. Solov'ev, in Reviews of Plasma Physics, Vol. 6, 239 (1965).

81. G. O. Spies and D. B. Nelson, Phys. Fluids 17, 1879 (1974).

82. F. L. Hinton and J. A. Robertson, Phys. Fluids 27, 1243 (1984).

83. A. A. Ware, Phys. Rev. Lett. 25, 916 (1970).

84. J. D. Jackson, Classical Electrodynamics, (John Wiley & Sons, Inc., New York, 1962).

85. R. G. Littlejohn, J. Plasma Physics 29, 111 (1983).

86. H. K. Wimmel, Report IPP 6/218. D-8046 Garching bei Munchen: Max-Planck-Institut fur Plasmaphysik (1983); Z. Naturforschung 38a, 601 (1983).

87. R. B. Lindsay, Introduction to Physical Statistics, (John Wiley and Sons, New York, 1941).

88. M. N. Rosenbluth, W. M. MacDonald and D. L. Judd, Phys. Rev. 107, 1 (1957).

89. B. A. Trubnikov, in Reviews of Plasma Physics, (Consultants Bureau, New York, 1965), Vol. 1.

90. T. W. Johnston, Physical Review 120, 1103 (1960).

91. I. P. Shkarofsky, Canadian Journal of Phys. 41, 1753 (1963).

92. I. P. Shkarofsky, T. W. Johnston and M. P. Bachynski, The Particle Kinetics of Plasmas, (Addison-Wesley, Reading, Mass., 1966).

93. P. L. Bhtnager, E. P. Gross and M. Krook, Phys. Rev. 94, 511 (1954).

94. G. Arfken, Mathematical Methods for Physicists, (Academic Press, New York, 1970).

95. D. J. Sigmar, J. F. Clarke and S. P. Hirshman, Oak Ridge National Laboratory Report TM-4605 (1974).

96. S. P. Hirshman, Transport Theory of a Toroidally Confined Multispecies Plasma, Ph.D. Thesis, M.I.T. (1976).

97. S. I. Braginskii, in Reviews of Plasma Physics, edited by M. A. Leontovich (Consultants Bureau, New York, 1965) Vol. 1, 205.

98. N. N. Lebedev, Special Functions and Their Applications, (Prentice-Hall, Englewood Cliffs, New Jersey, 1965).

99. R. D. Hazeltine, Advances in Plasma Physics 6, 273 (1976).

100. R. D. Hazeltine and A. A. Ware, Nucl. Fusion 16, 538 (1976).

101. S. P. Hirshman, Phys. Fluids 19, 155 (1976).

102. C. F. Chew, M. L. Goldberger and F. E. Low, Proc. R. Soc. London, Ser. A, 236, 112 (1956).

103. J. G. Cordey and M. J. Houghton, Nucl. Fusion 13, 215 (1973).

104. S. P. Hirshman, Phys. Fluids 20, 589 (1977).

105. R. D. Hazeltine and F. L. Hinton, Phys. Fluids 16, 1883 (1973).

106. J. M. Rawls, Ming Sheng Chu and F. L. Hinton, Phys. Fluids 18, 1160 (1975).

107. L. Spitzer, Physics of Fully Ionized Gases, (Interscience, New York, 1967).

108. H. Grad, Comm. Pure and Appl. Math. 2, 231 (1949).

109. A. H. Boozer, Princeton Plasma Physics Laboratory Report EPRI-4, (1976).

110. J. G. Cordey, and W. G. F. Core, Phys. Fluids 17, 1626 (1974).

111. J. A. Rome, D. G. McAlees, J. D. Callen and R. H. Fowler, Nucl. Fusion 16, 55 (1976).

112. V. V. Fomenko, Nucl. Fusion 15, 1091 (1975).

113. K. Brau, Impurity Poloidal Asymmetries and Plasma Rotation in PDX Tokamaks, Ph.D. Thesis, Princeton University (1983).

114. R. C. Isler, Oak Ridge National Laboratory Report TM-6015, (1983).

115. A. J. Wooton, et al., Oak Ridge National Laboratory Report TM-8750 (1983).

116. R. C. Isler, et al., Phys. Rev. Lett. 47, 333 (1981).

117. R. C. Isler, E. C. Crume and D. E. Arnurius, Phys. Rev. Lett. A 26,2015 (1982).

118. S. Suckewer, et al., Nucl. Fusion 21, 981 (1981).

119. S. Suckewer, et al., Nucl. Fusion 24, 815 (1984).

120. J. G. Cordey, Nucl. Fusion 16, 499 (1976).

121. J. G. Cordey, in Plasma Physics and Controlled Nuclear Fusion Research (Proc. 5th Int. Conf. Tokyo, 1974) Vol.1, IAEA, Vienna 623 (1975).

122. M. R. Spiegel, Applied Differential Equations, (Prentice -Hall, Inc., Englewood Cliffs, New Jersey, 1967).

123. C. E. Thomas, et al., Bull. Am. Phys. Soc., 29, No#8, 1351.

124. C. E. Thomas and G. W. Neeley, to be published.